1:2

Business
Conference
Women Week
Business
Conference
Business
Conference
Women Week

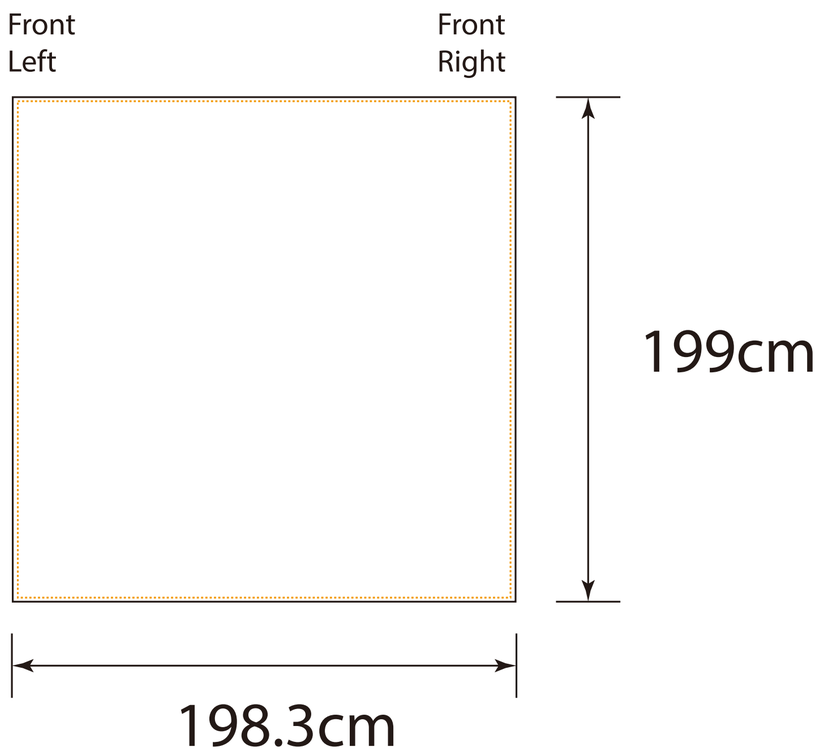
Front
Left
Front
Right
199cm
198.3cm

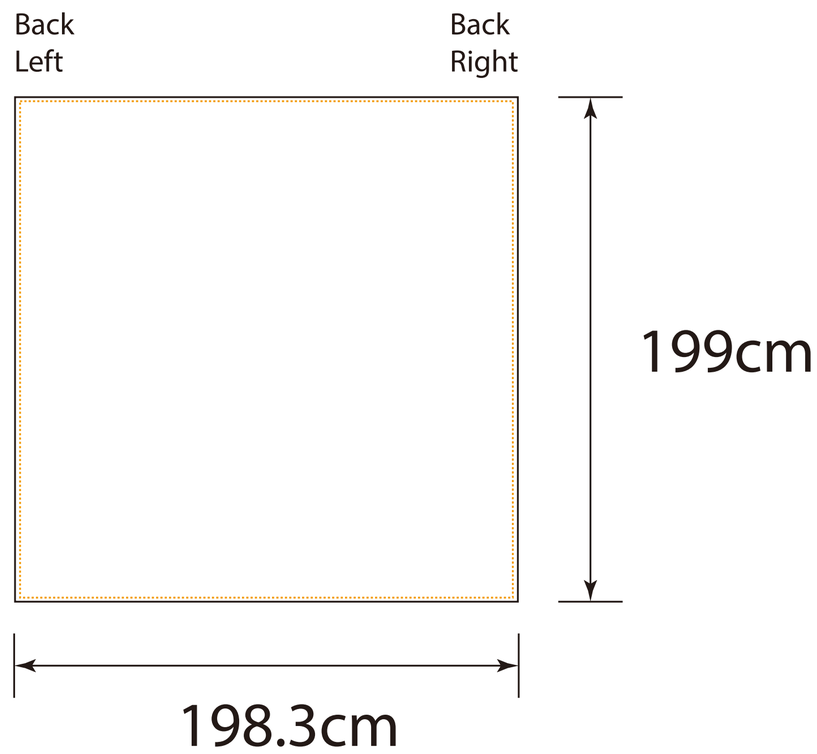
Back
Left
Back
Right
199cm
198.3cm

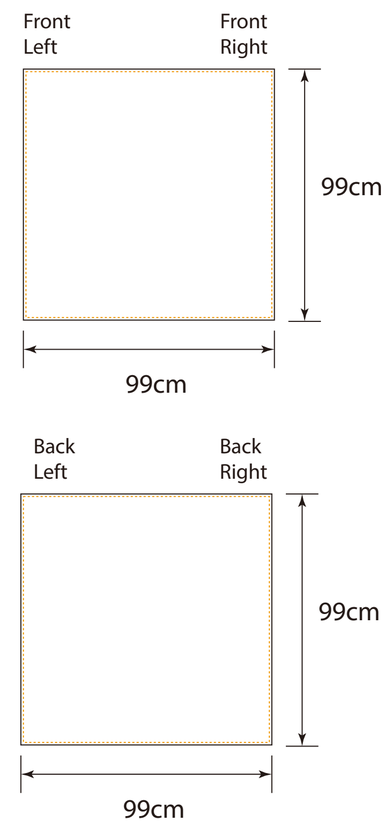
Front
Left
Front
Right
99cm
99cm
Back
Left
Back
Right
99cm
99cm

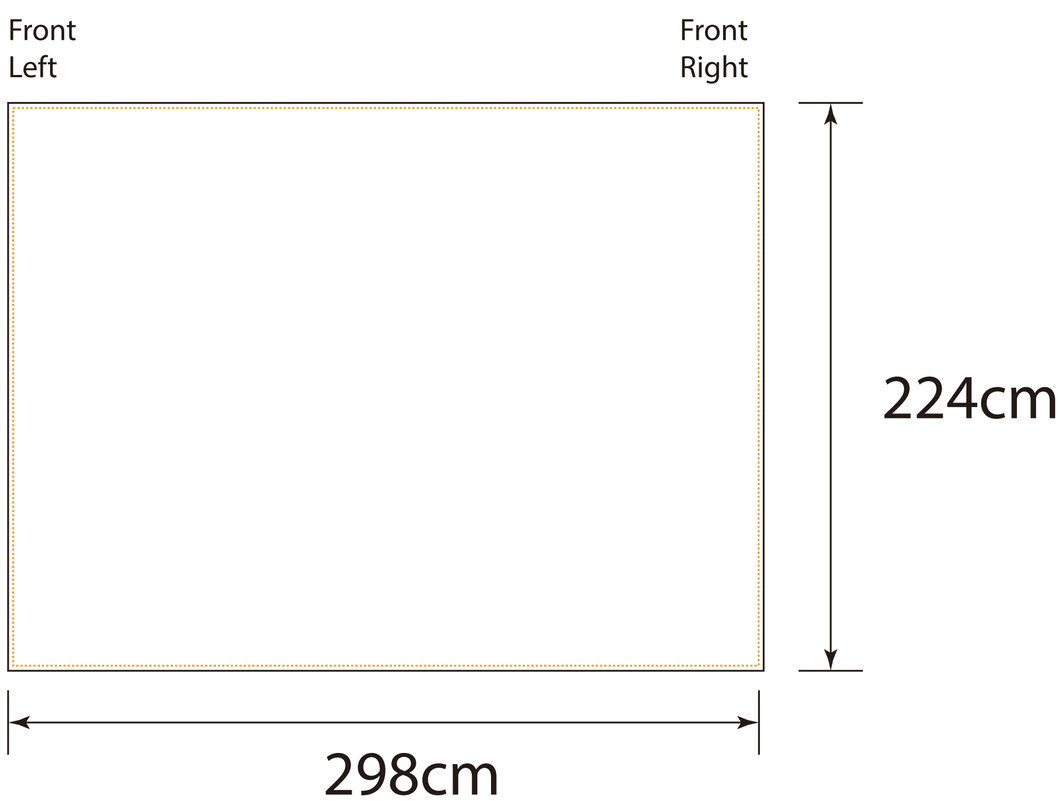
Front
Left
Front
Right
224cm
298cm

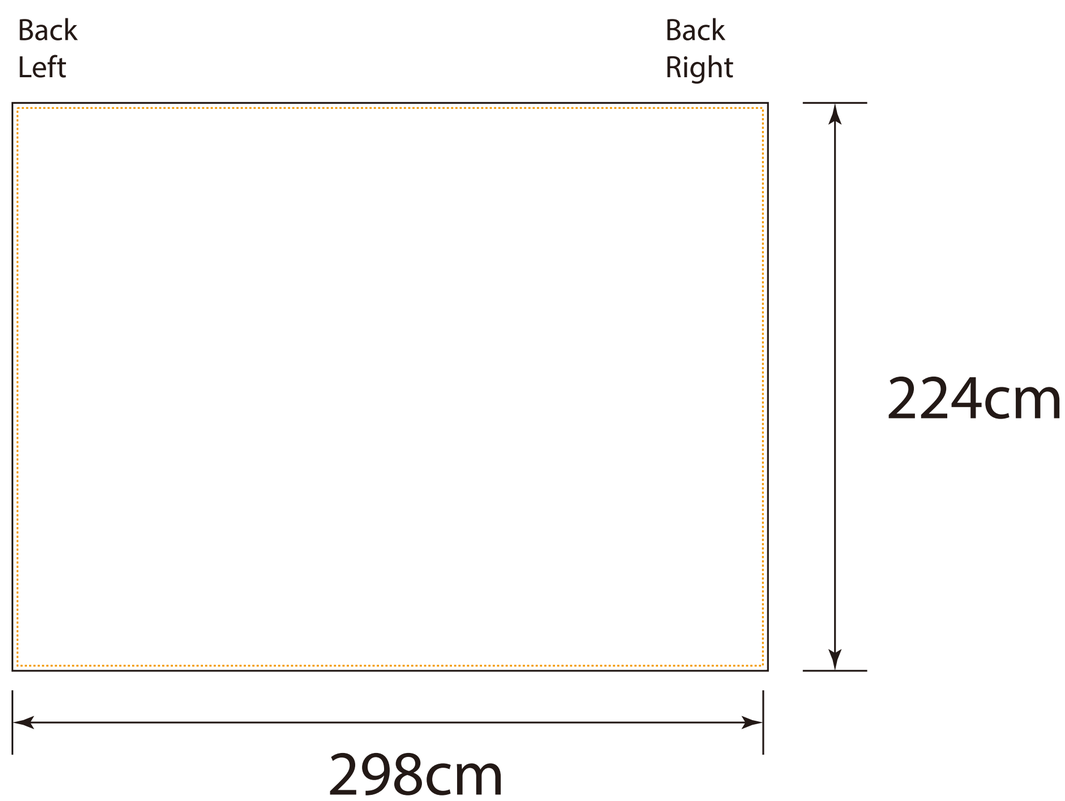
Back
Left
Back
Right
224cm
298cm