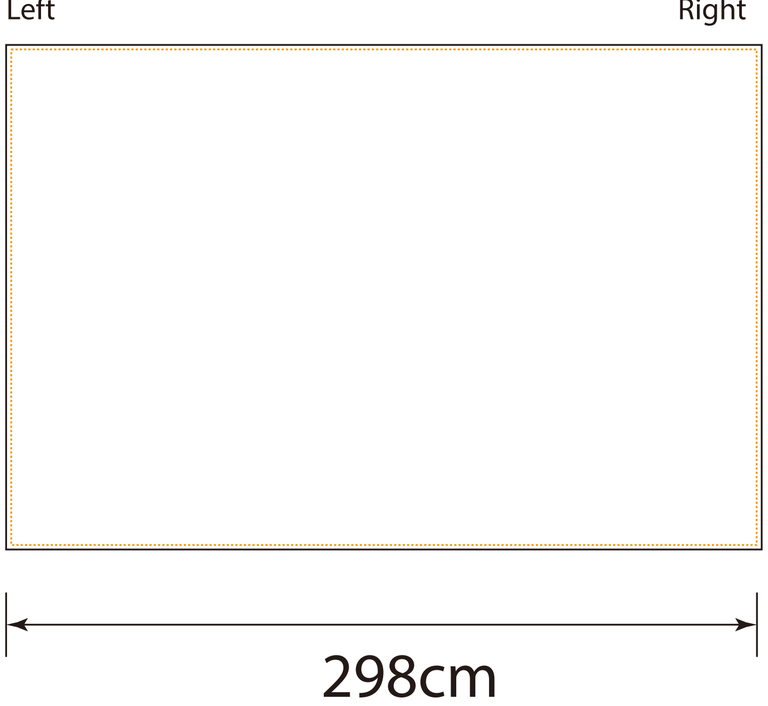
Left
Right
298cm

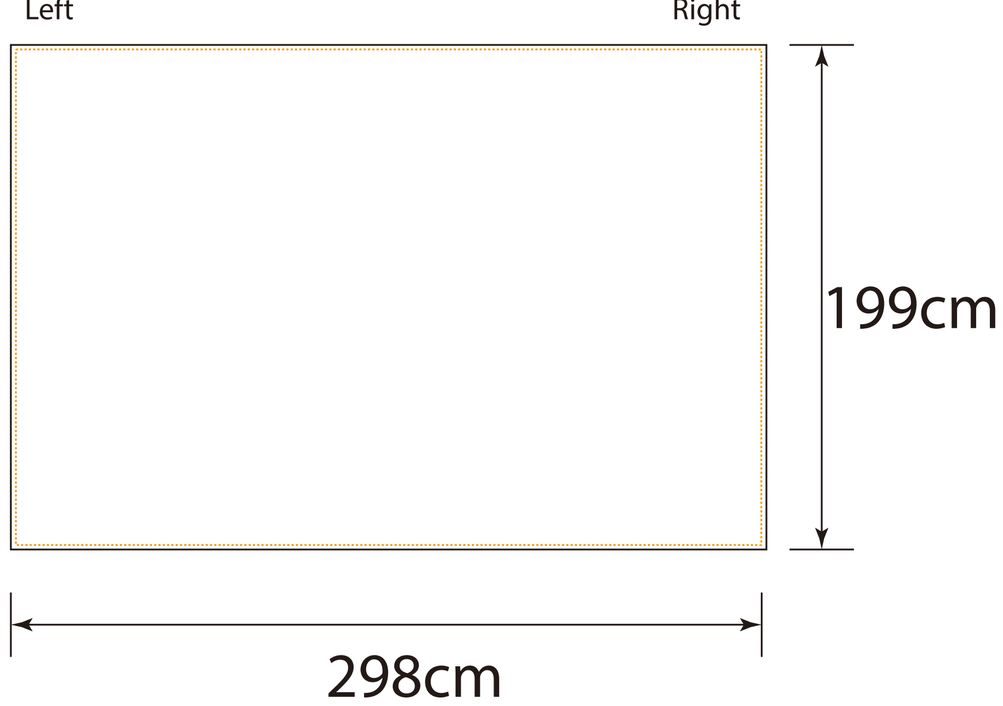
Left
Right
199cm
298cm

Business
Conference
Women Week
Business
Conference
Women Week

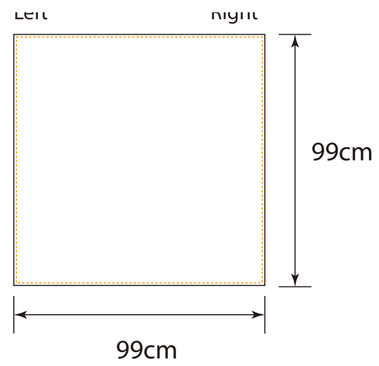
99cm
99cm

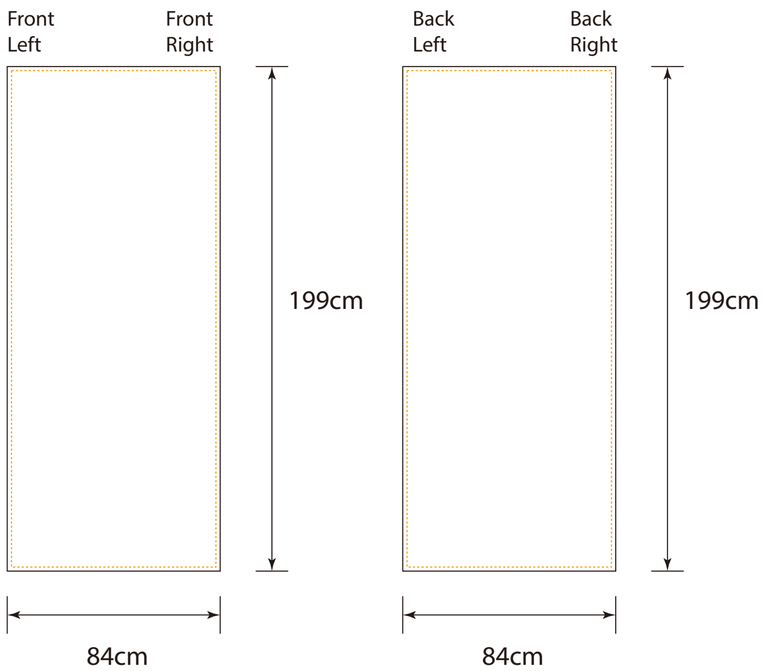
Front
Left
Front
Right
199cm
84cm
Back
Left
Back
Right
199cm
84cm

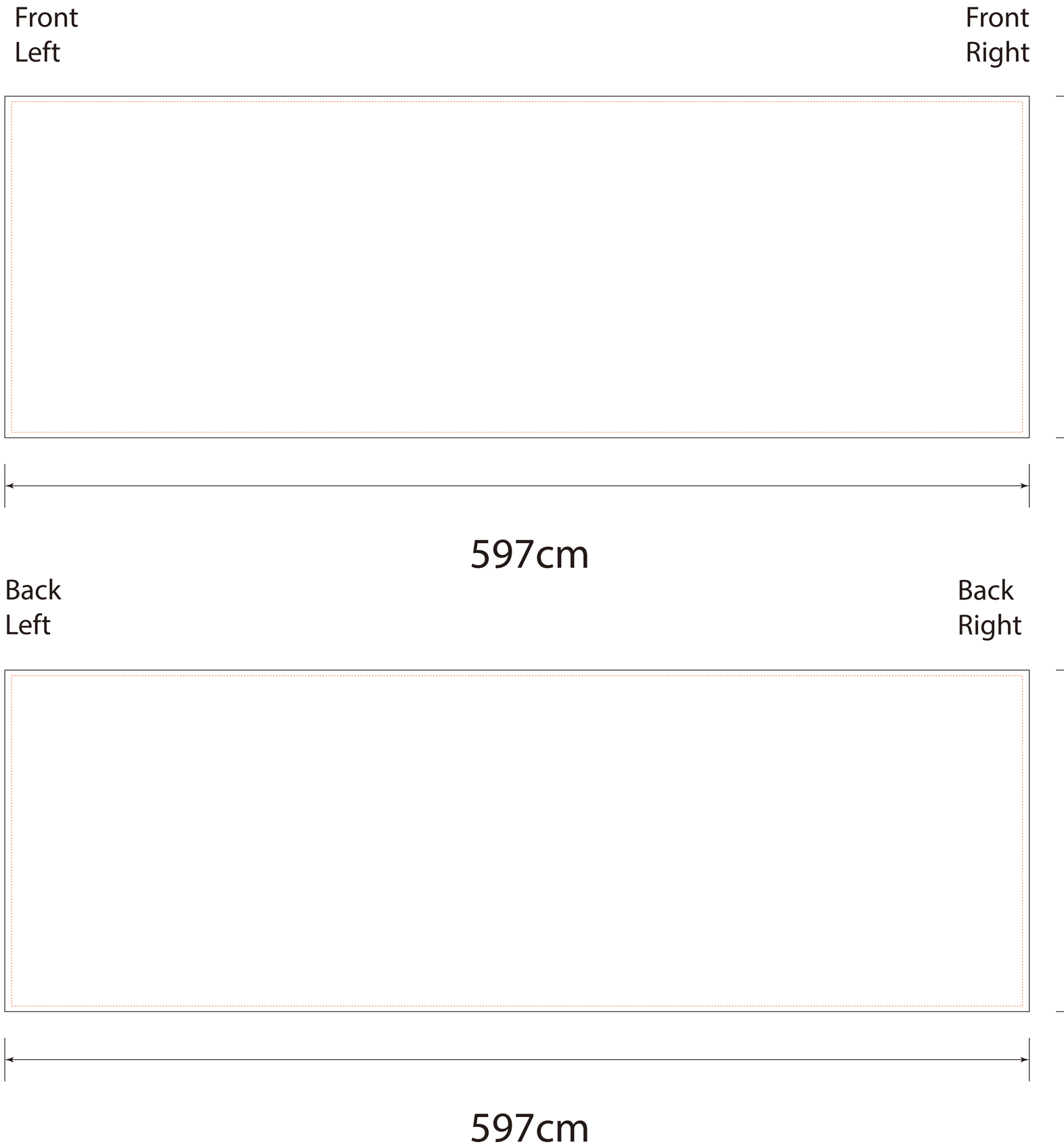
Front
Left
Front
Right
597cm
Back
Left
Back
Right
597cm