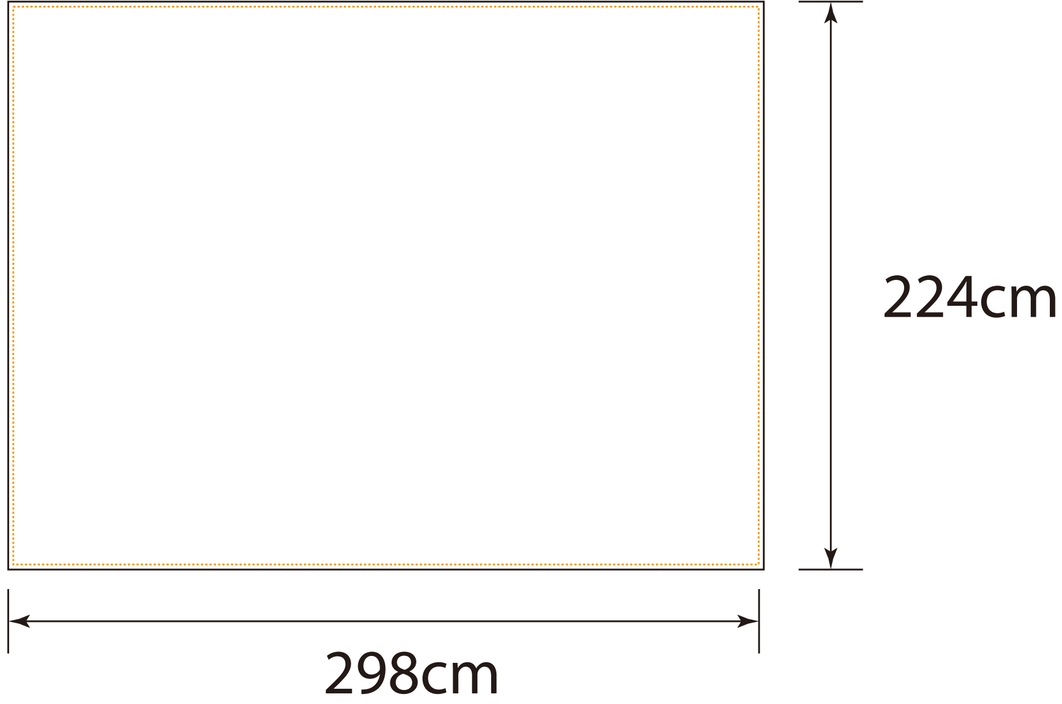
224cm
298cm

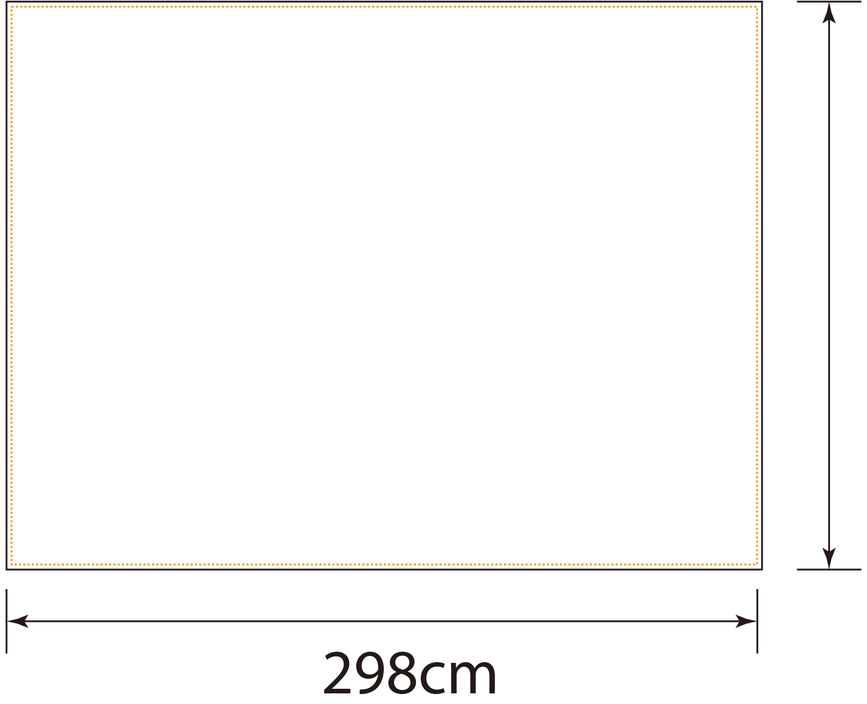
224cm
298cm

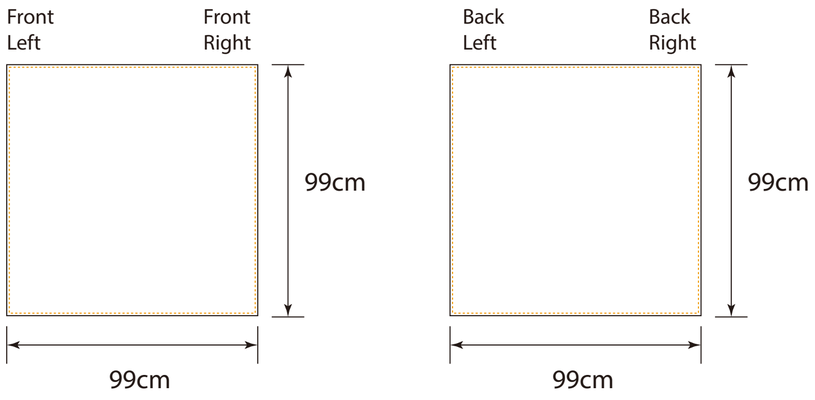
Front
Left
Front
Right
99cm
99cm
Back
Left
Back
Right
99cm
99cm

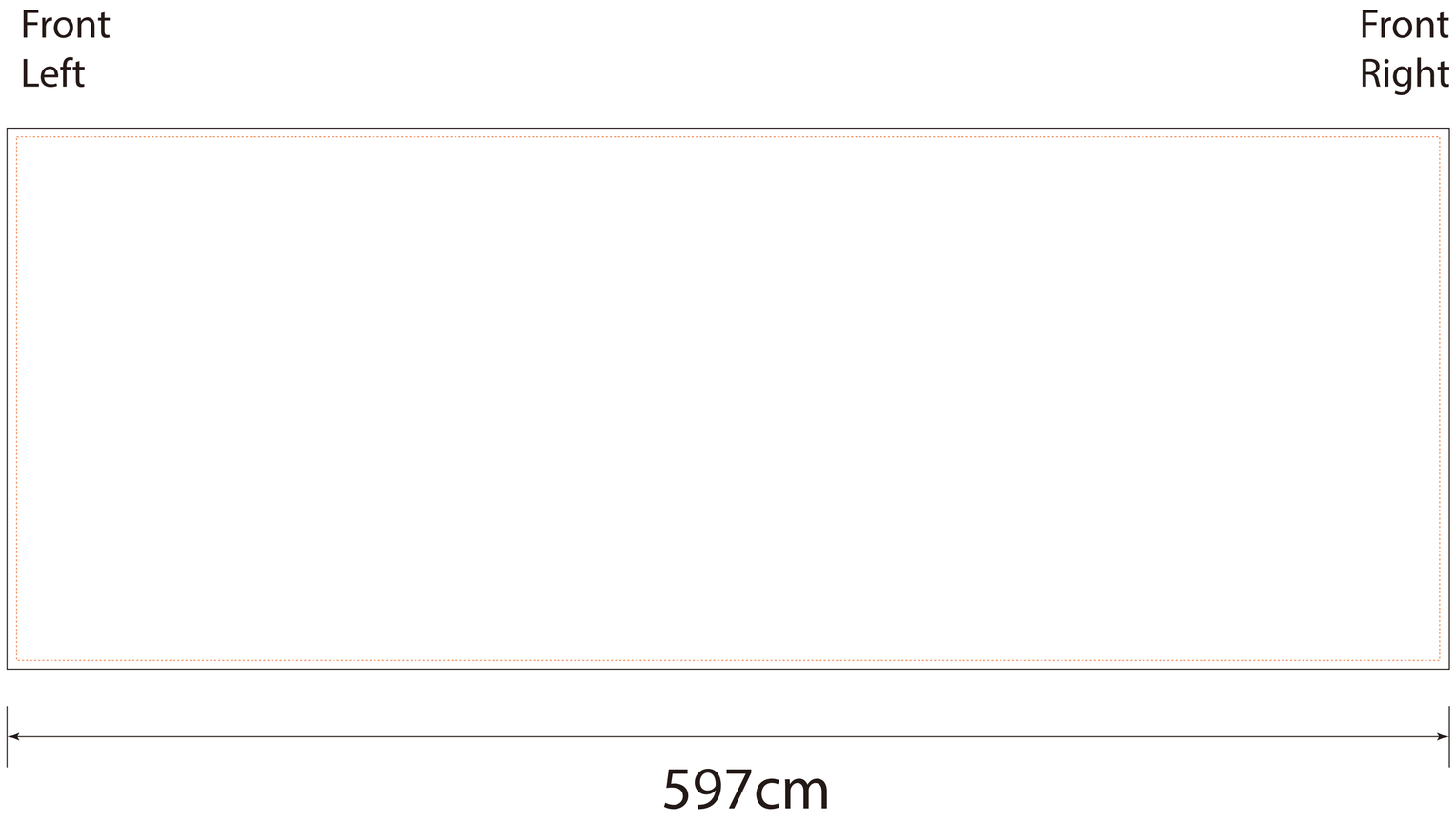
Front
Left
Front
Right
597cm

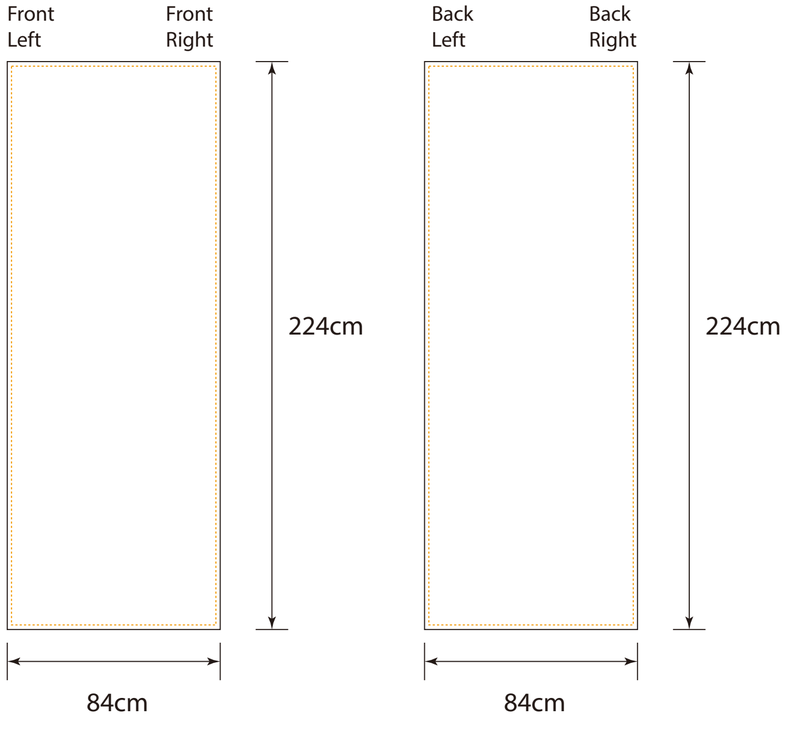
Front
Left
Front
Right
224cm
84cm
Back
Left
Back
Right
224cm
84cm

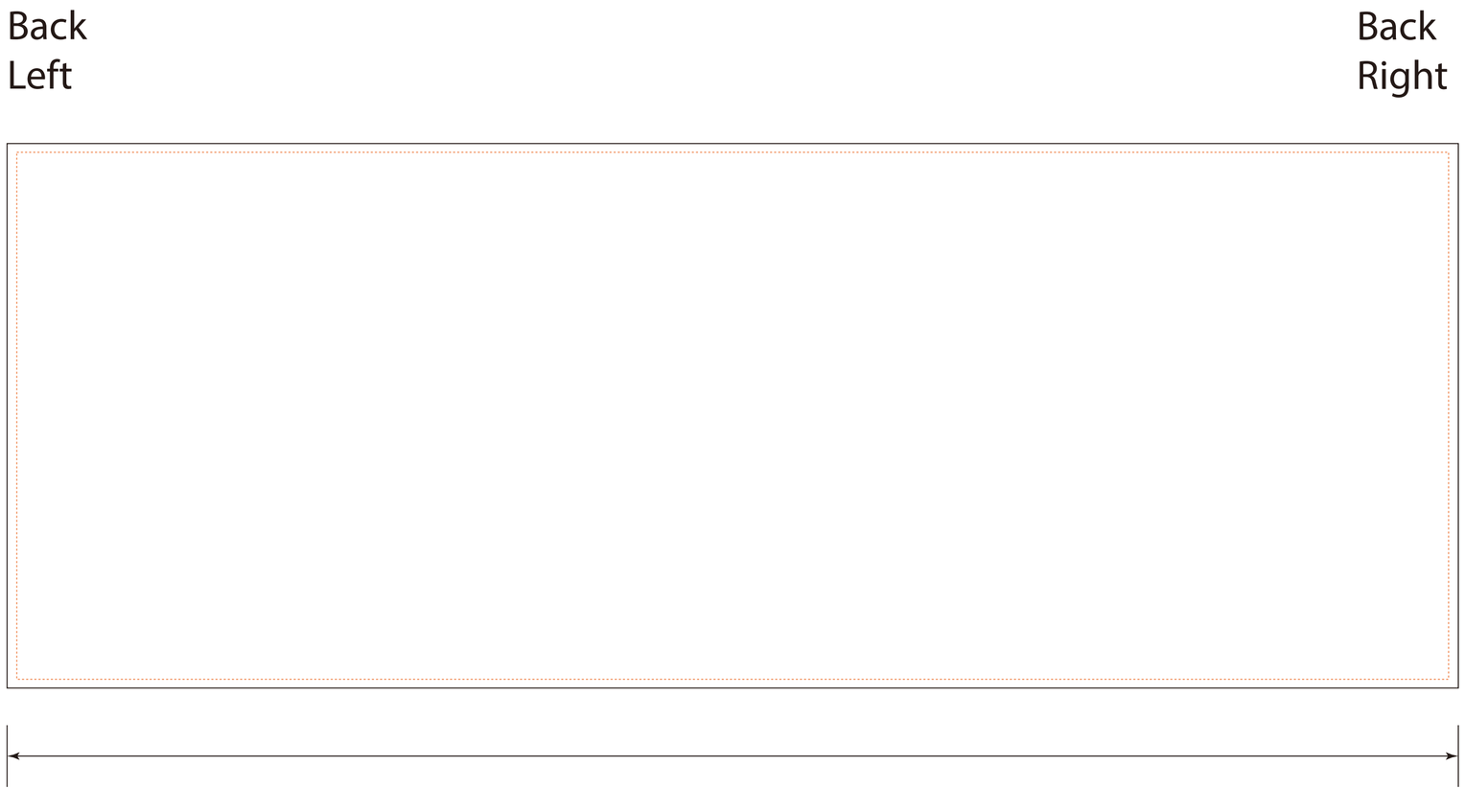
Back
Left
Back
Right
597cm