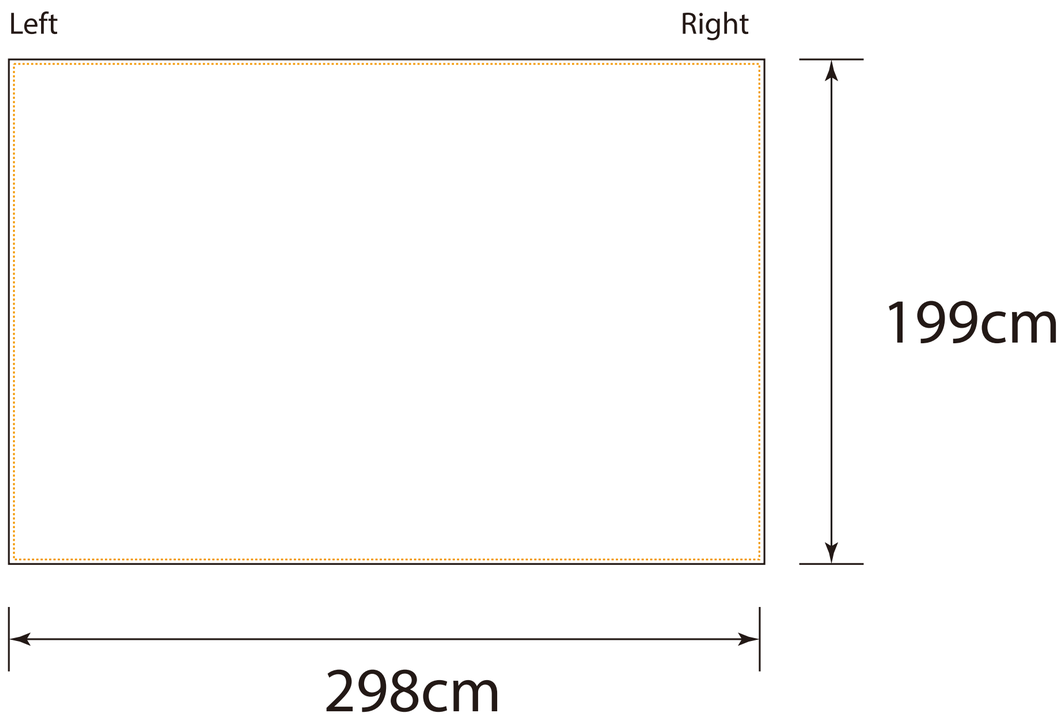
Left
Right
199cm
298cm

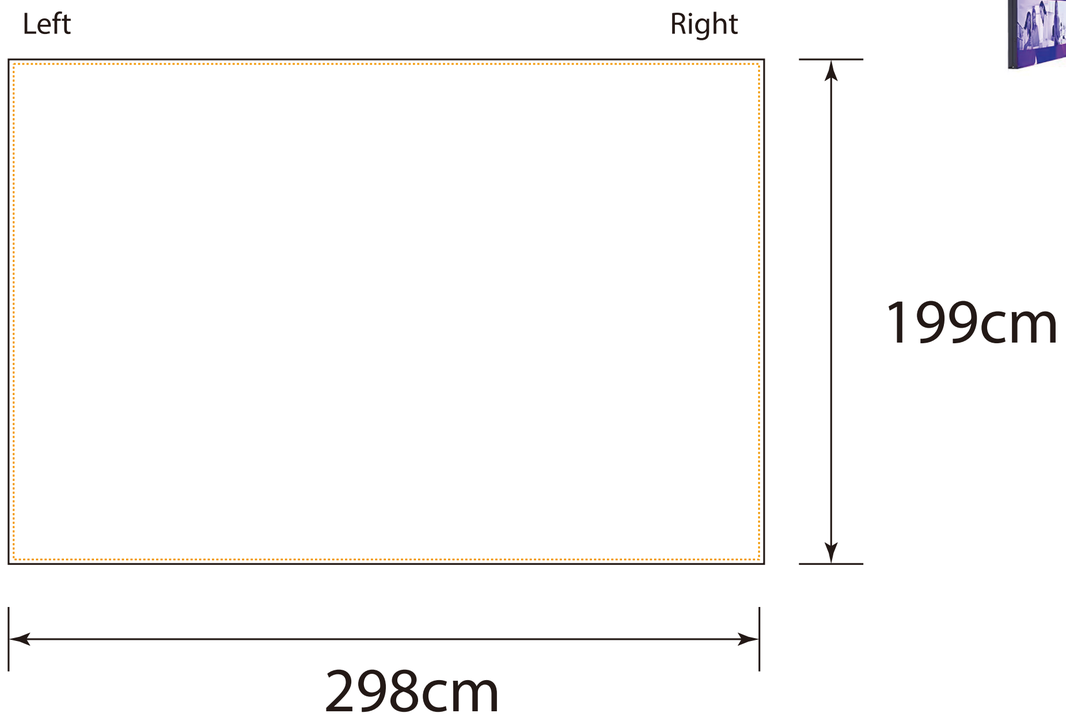
Left
Right
199cm
298cm

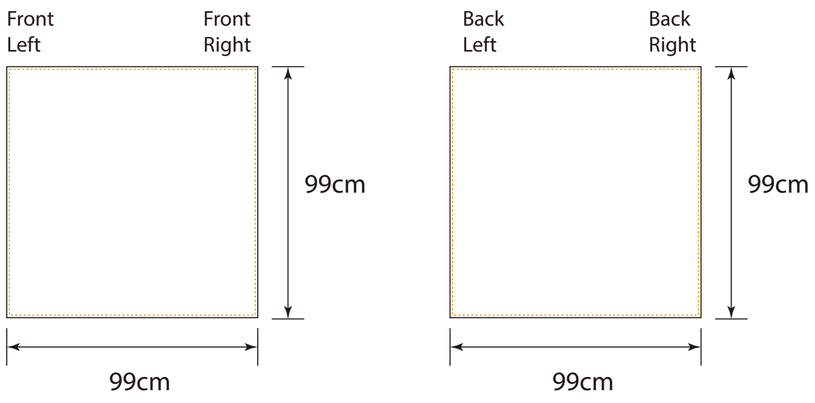
Front
Left
Front
Right
99cm
99cm
Back
Left
Back
Right
99cm
99cm

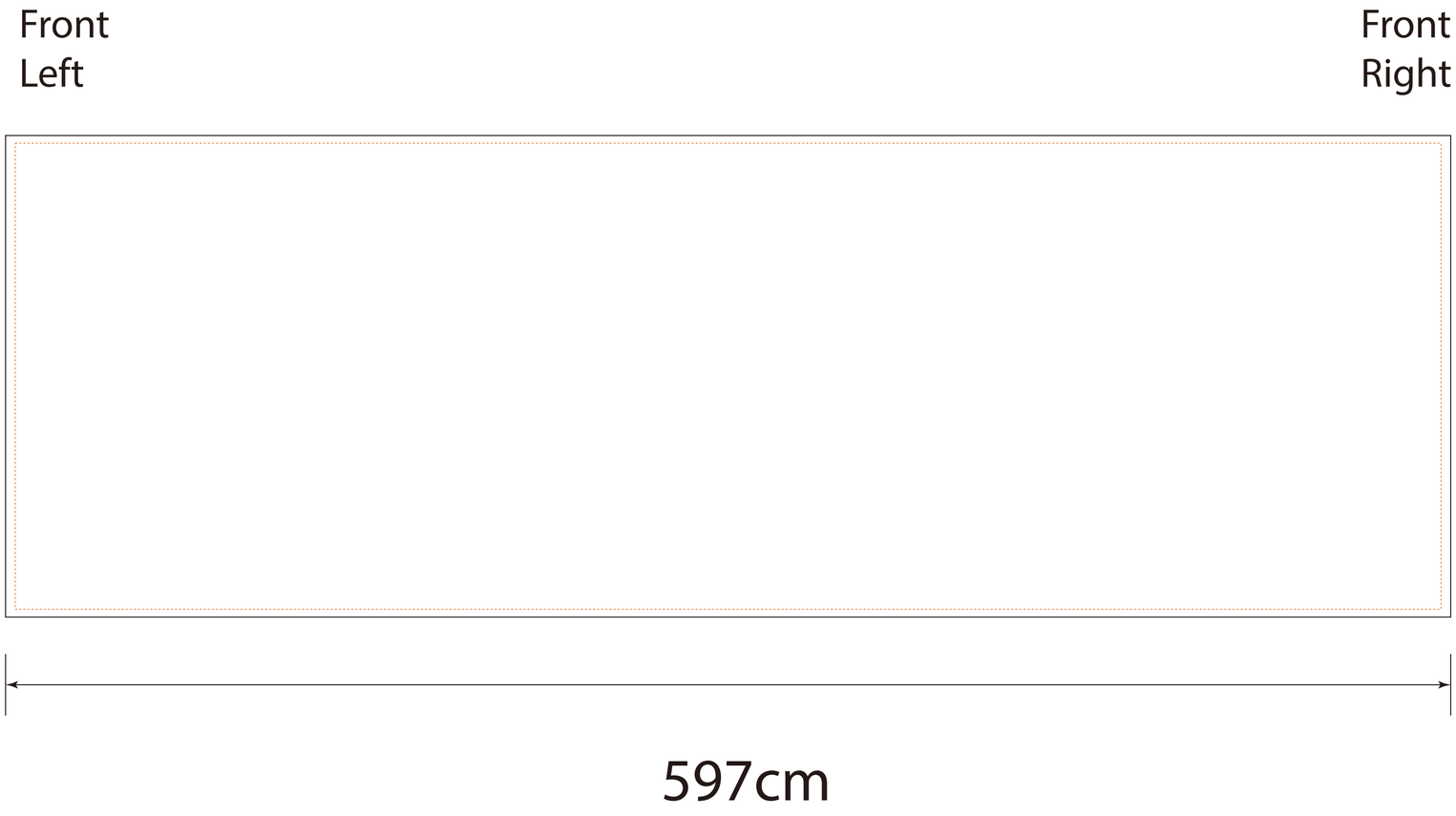
Front
Left
Front
Right
597cm

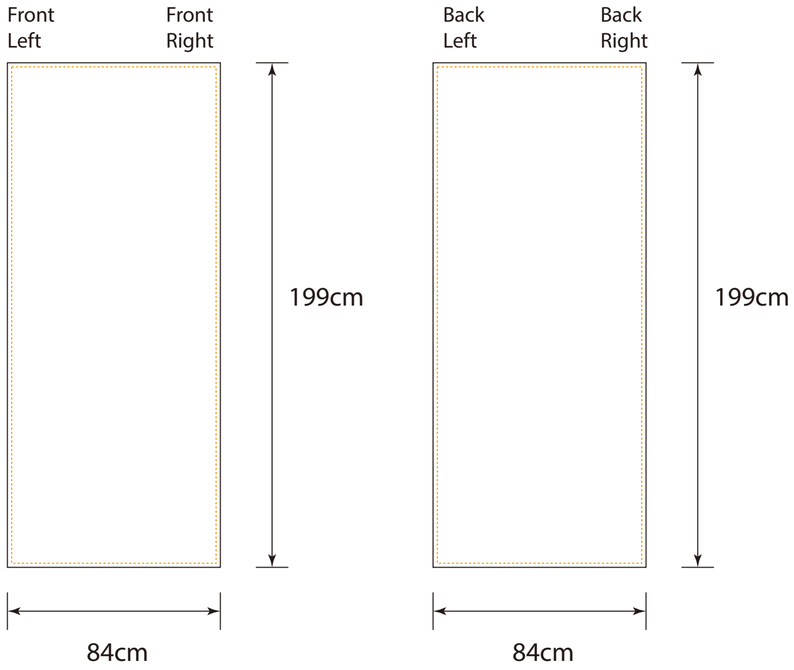
Front
Left
Front
Right
199cm
84cm
Back
Left
Back
Right
199cm
84cm

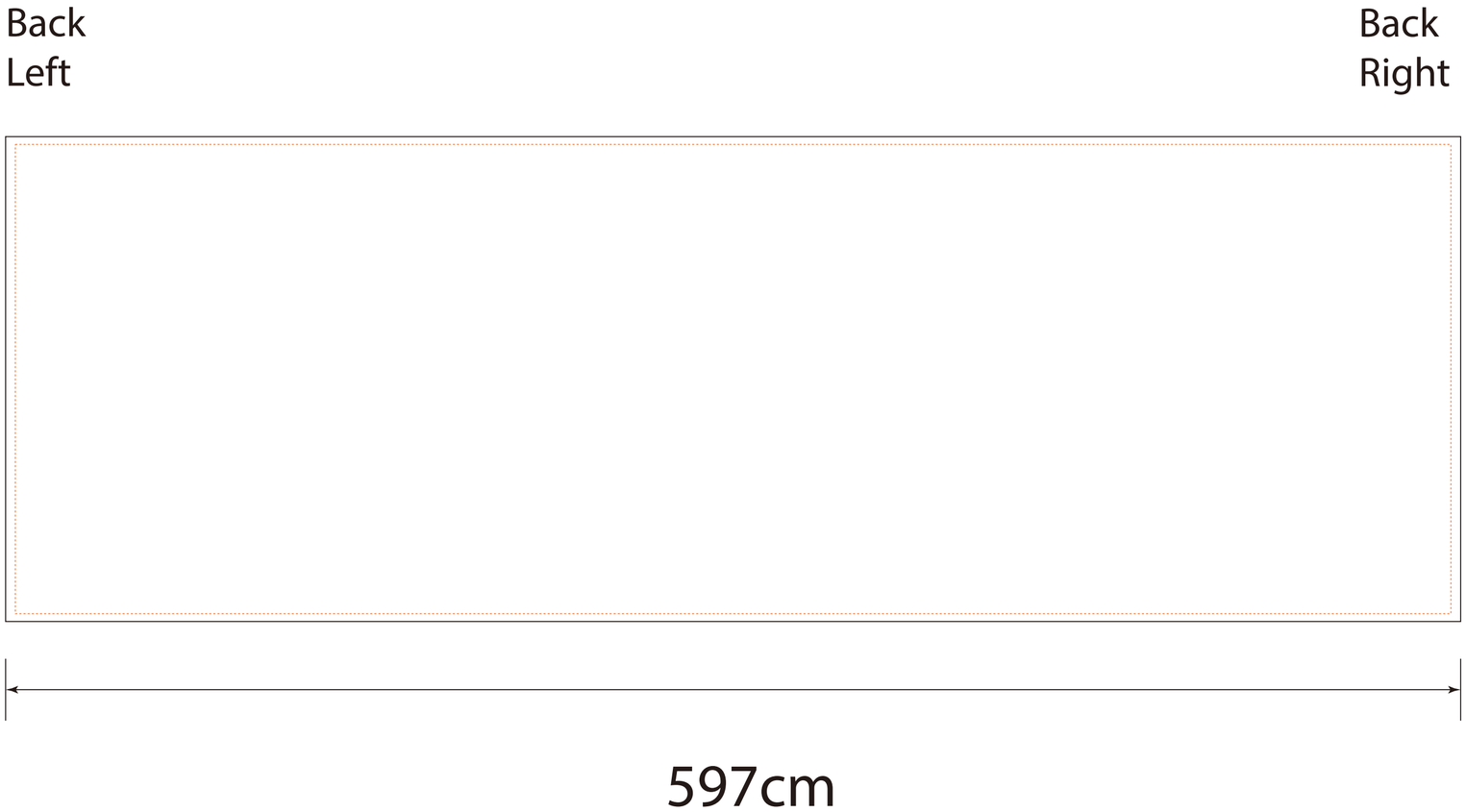
Back
Left
Back
Right
597cm