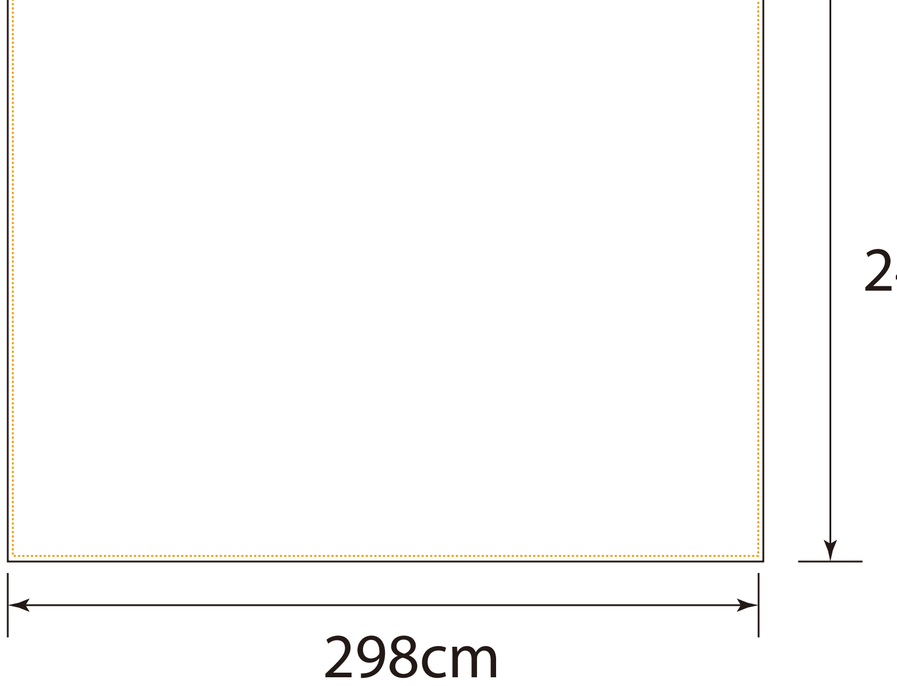
249cm
298cm

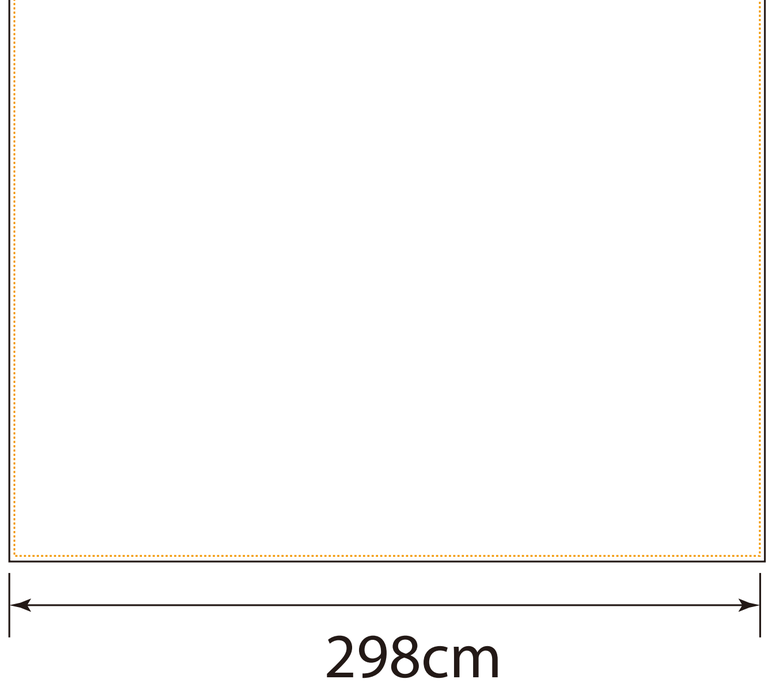
298cm

Business
Conference
Women Week

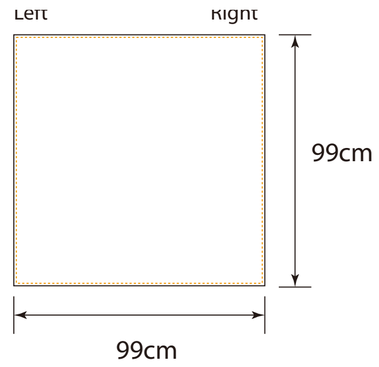
Left
Right
99cm
99cm

Left

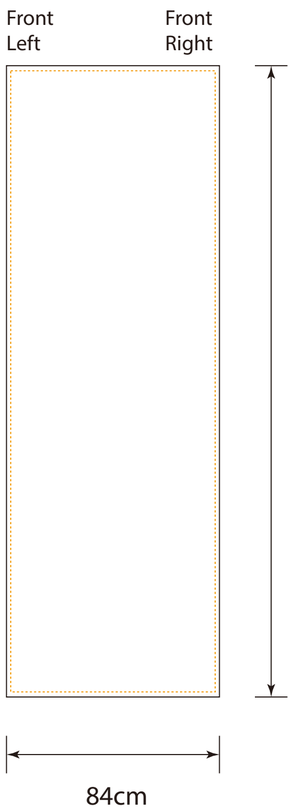
Front
Left
Front
Right
249cm
84cm

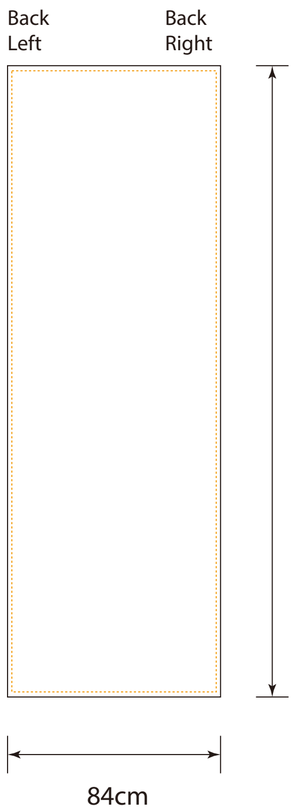
Back
Left
Back
Right
249cm
84cm

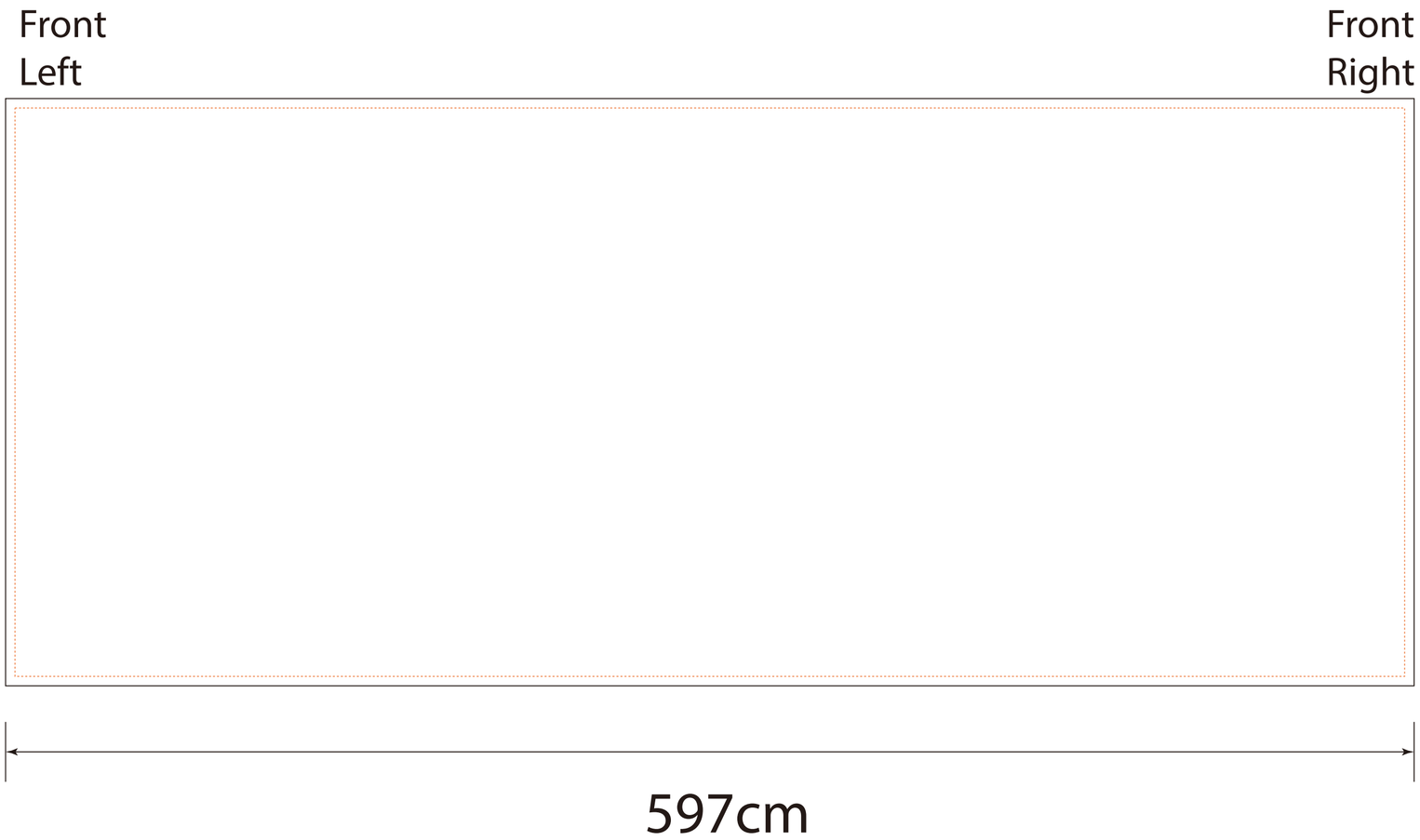
Front
Left
Front
Right
597cm

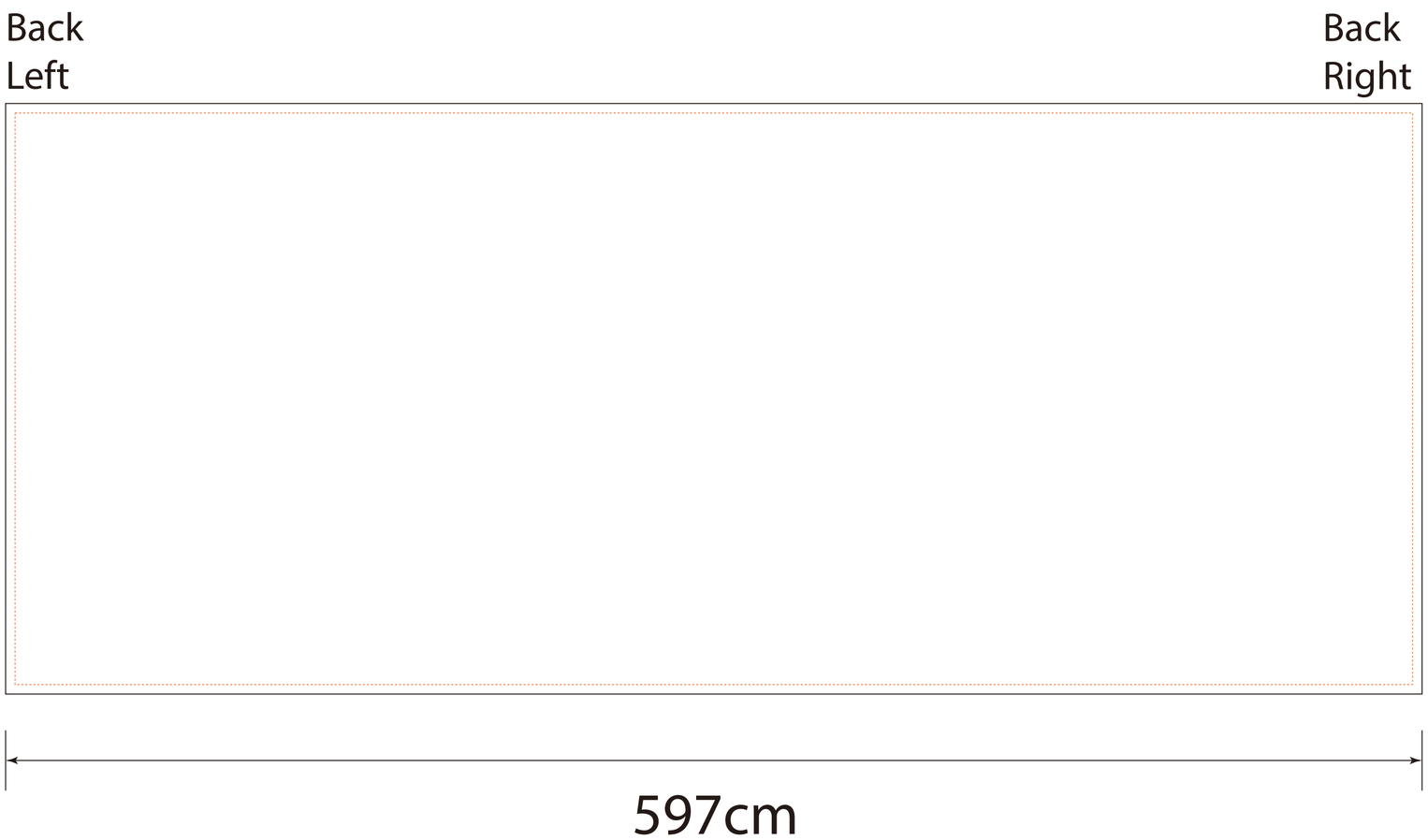
Back
Left
Back
Right
597cm