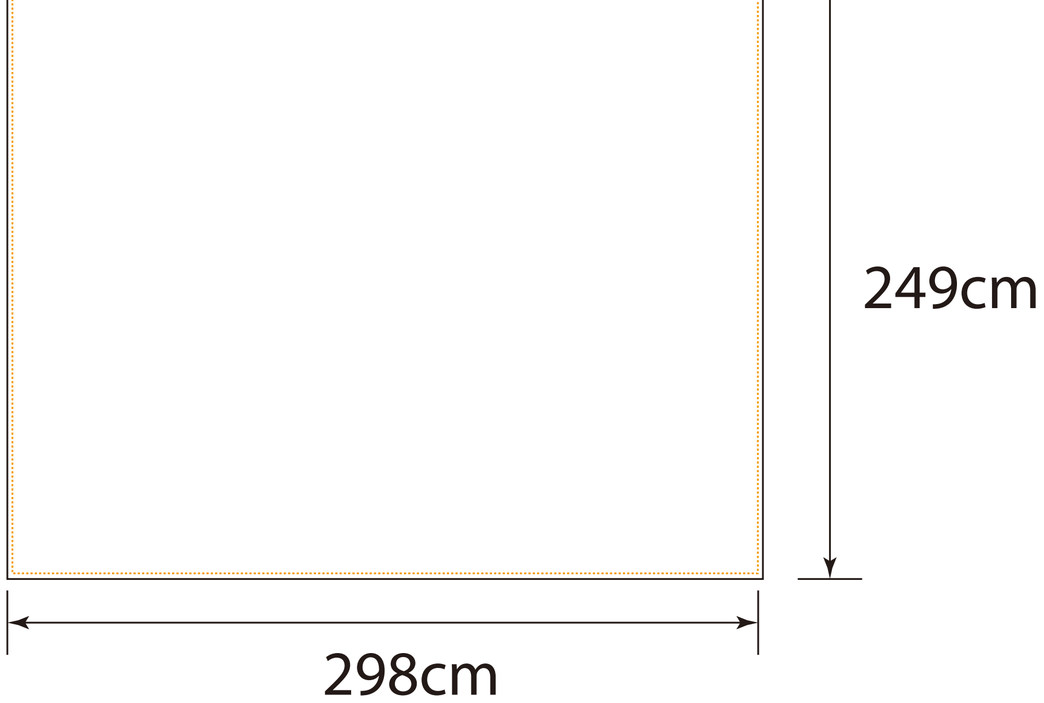
249cm
298cm

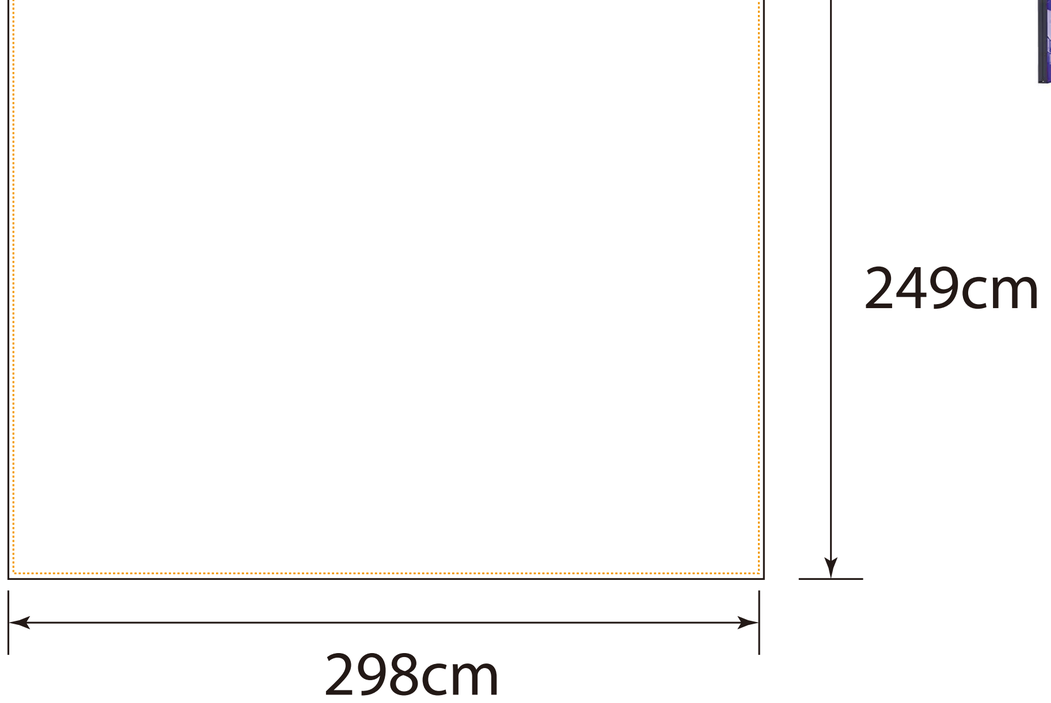
249cm
298cm

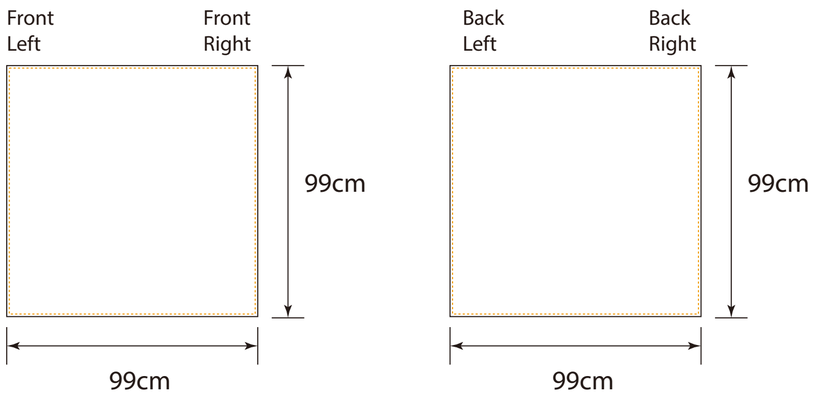
Front Left
Front Right
99cm
99cm
Back Left
Back Right
99cm
99cm

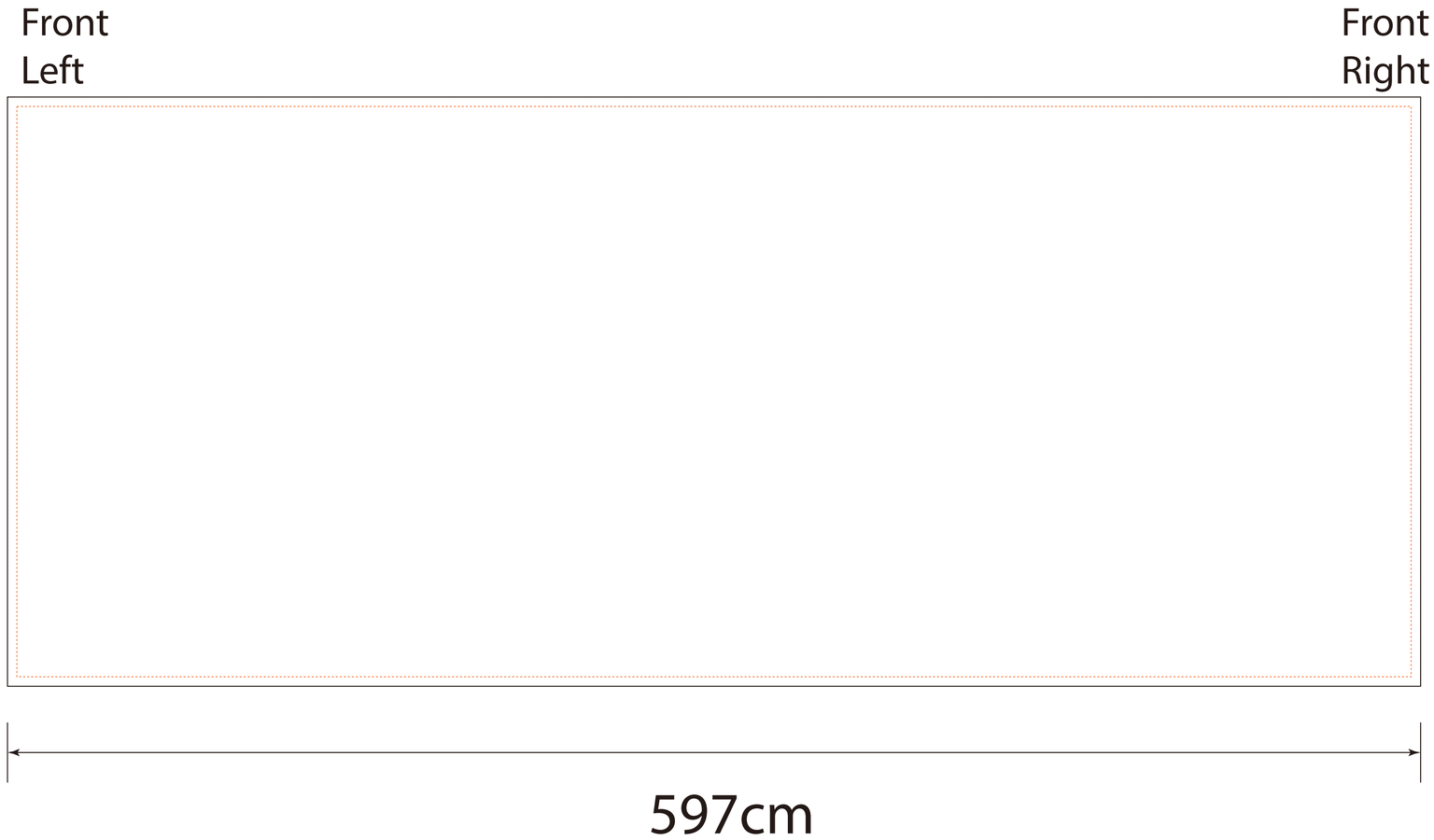
Front Left
Front Right
597cm

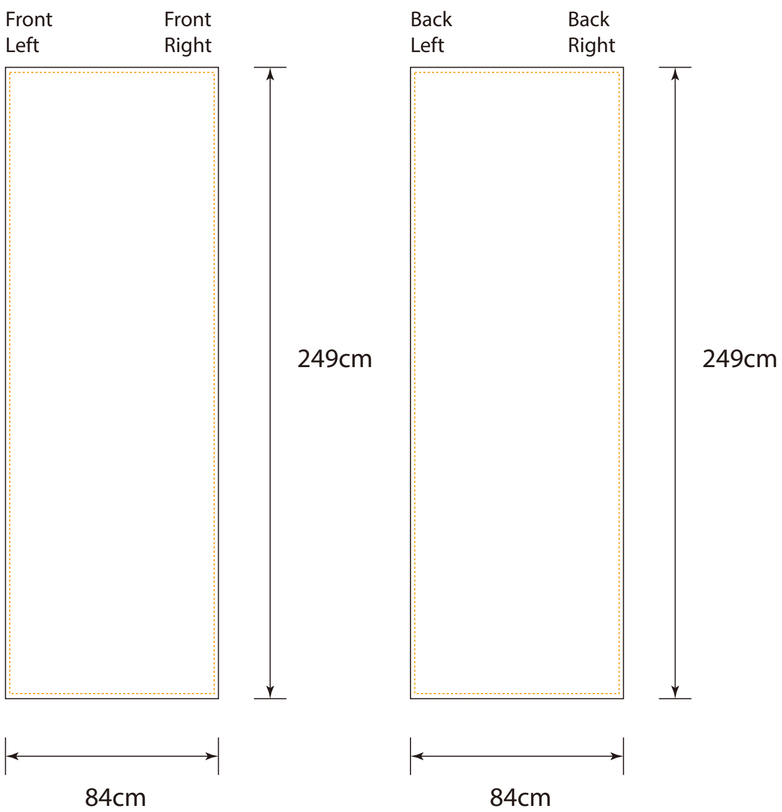
Front Left
Front Right
249cm
84cm
Back Left
Back Right
249cm
84cm

Back Left
Back Right
597cm