1:2

Business
Conference
Women Week

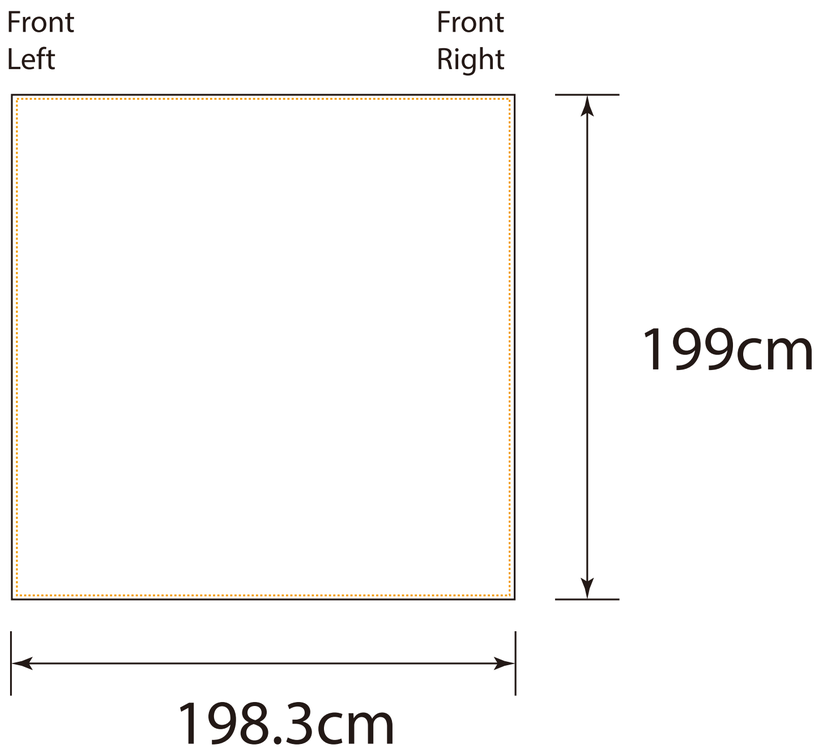
Front
Left
Front
Right
199cm
198.3cm

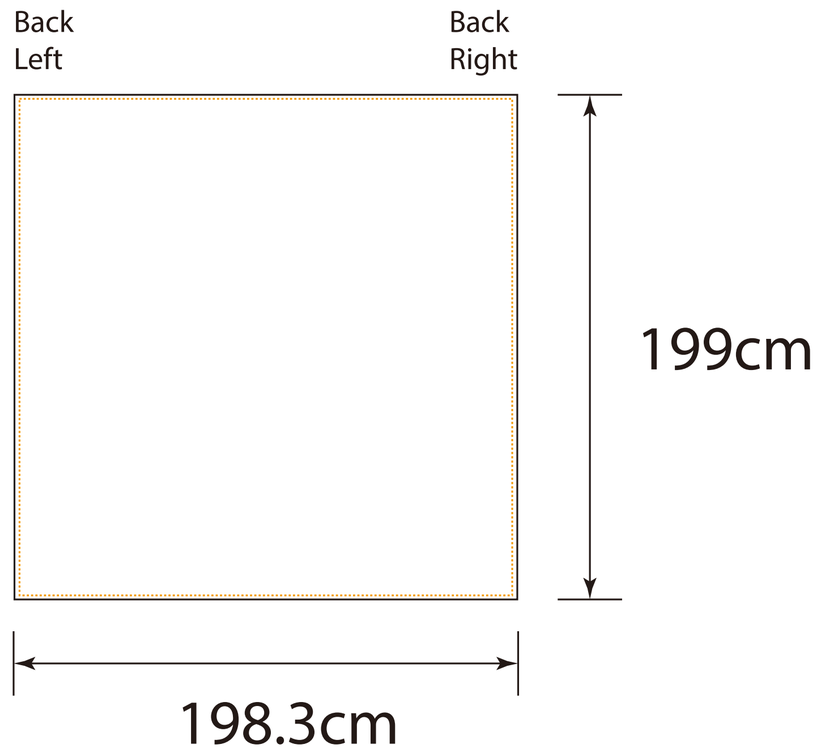
Back
Left
Back
Right
199cm
198.3cm

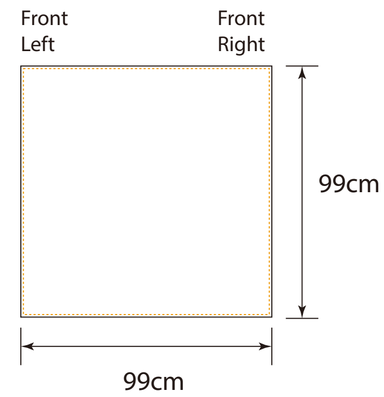
Front
Left
Front
Right
99cm
99cm

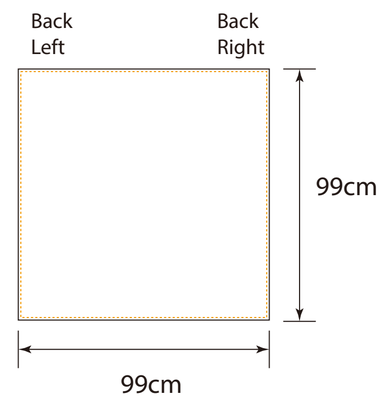
Back
Left
Back
Right
99cm
99cm

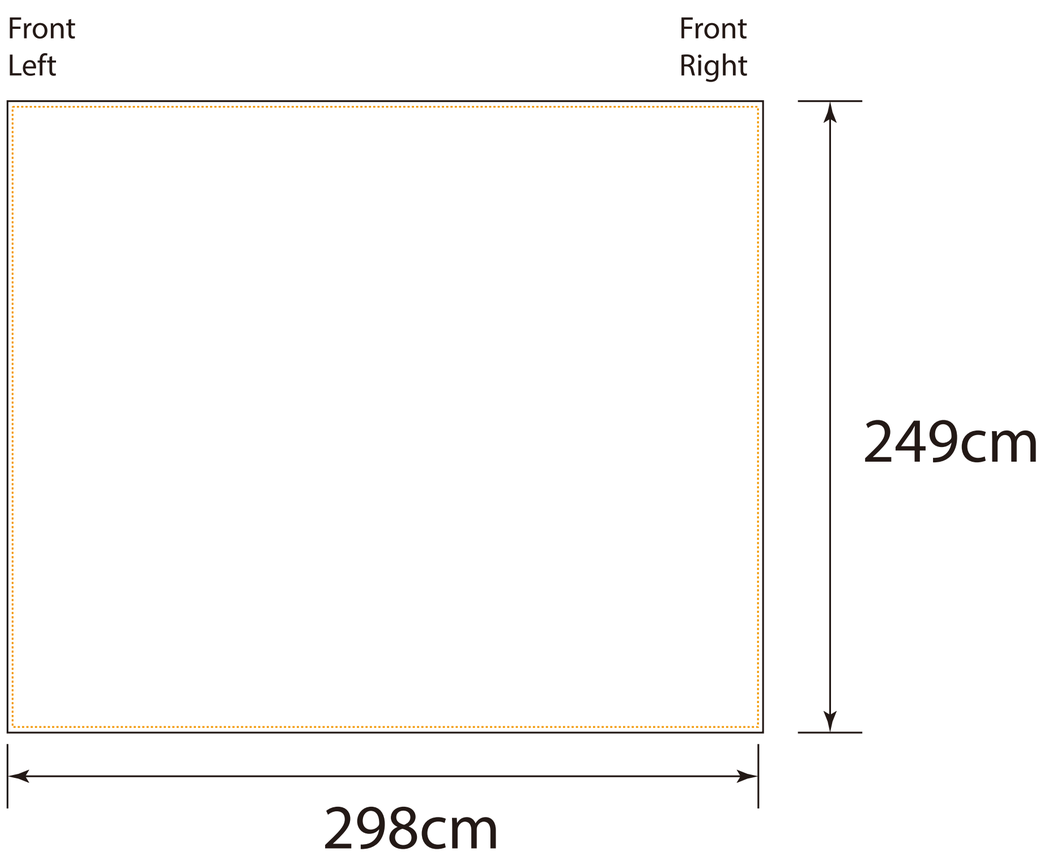
Front
Left
Front
Right
249cm
298cm

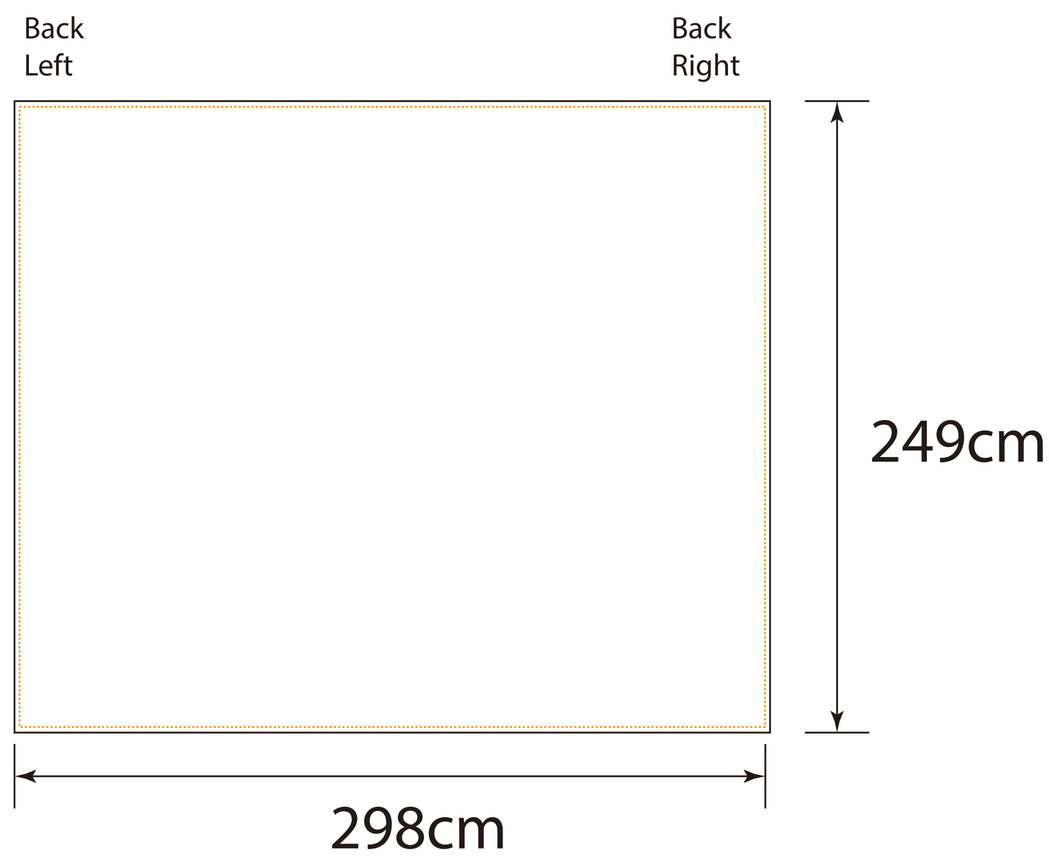
Back
Left
Back
Right
249cm
298cm