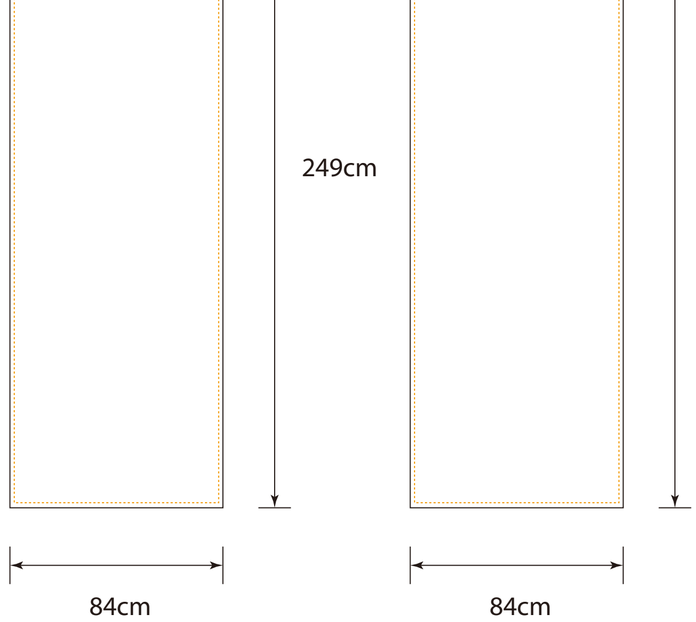
249cm
249cm
84cm
84cm

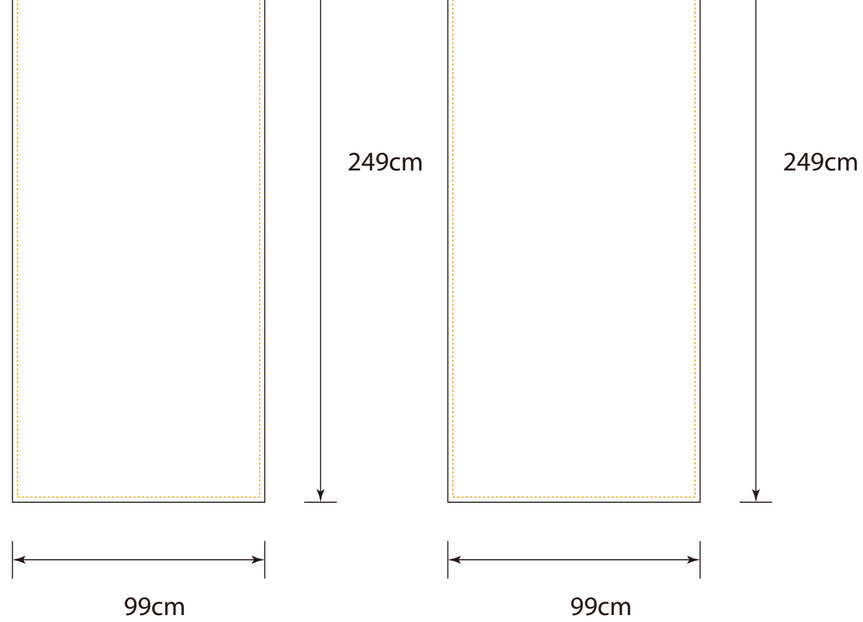
249cm
249cm
99cm
99cm

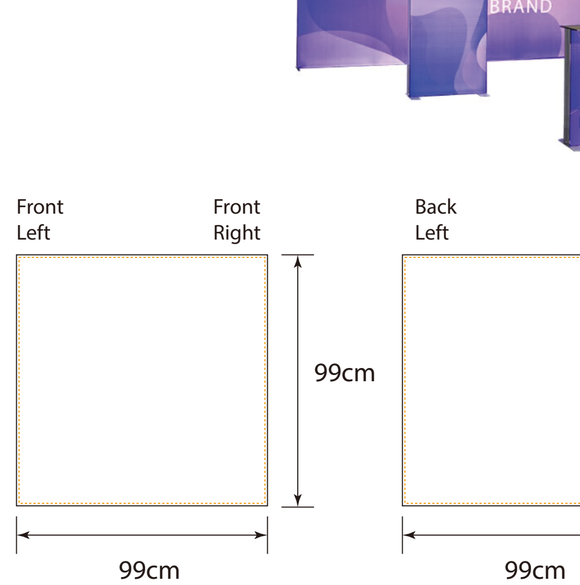
BRAND
Front Left
Front Right
Back Left
99cm
99cm
99cm

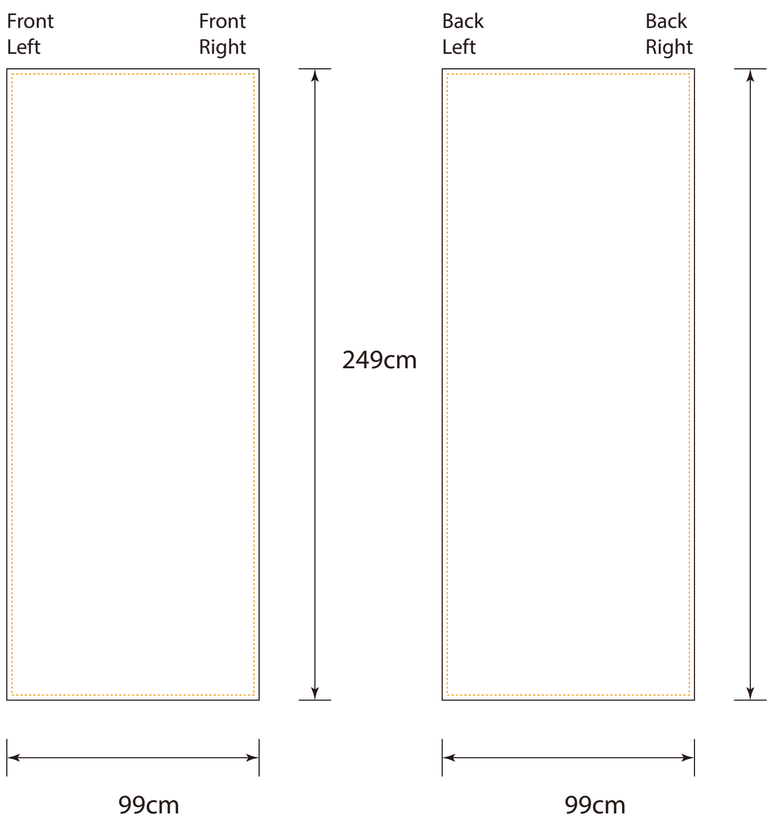
Front Left
Front Right
Back Left
Back Right
249cm
249cm
99cm
99cm

Front Left
Front Right
597cm

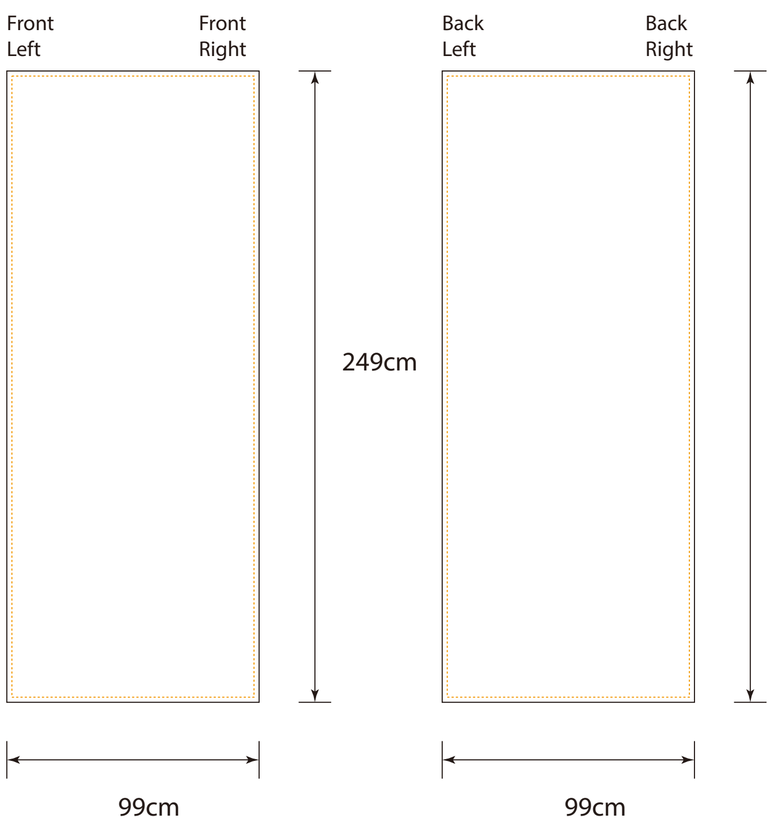
Front Left
Front Right
Back Left
Back Right
249cm
249cm
99cm
99cm

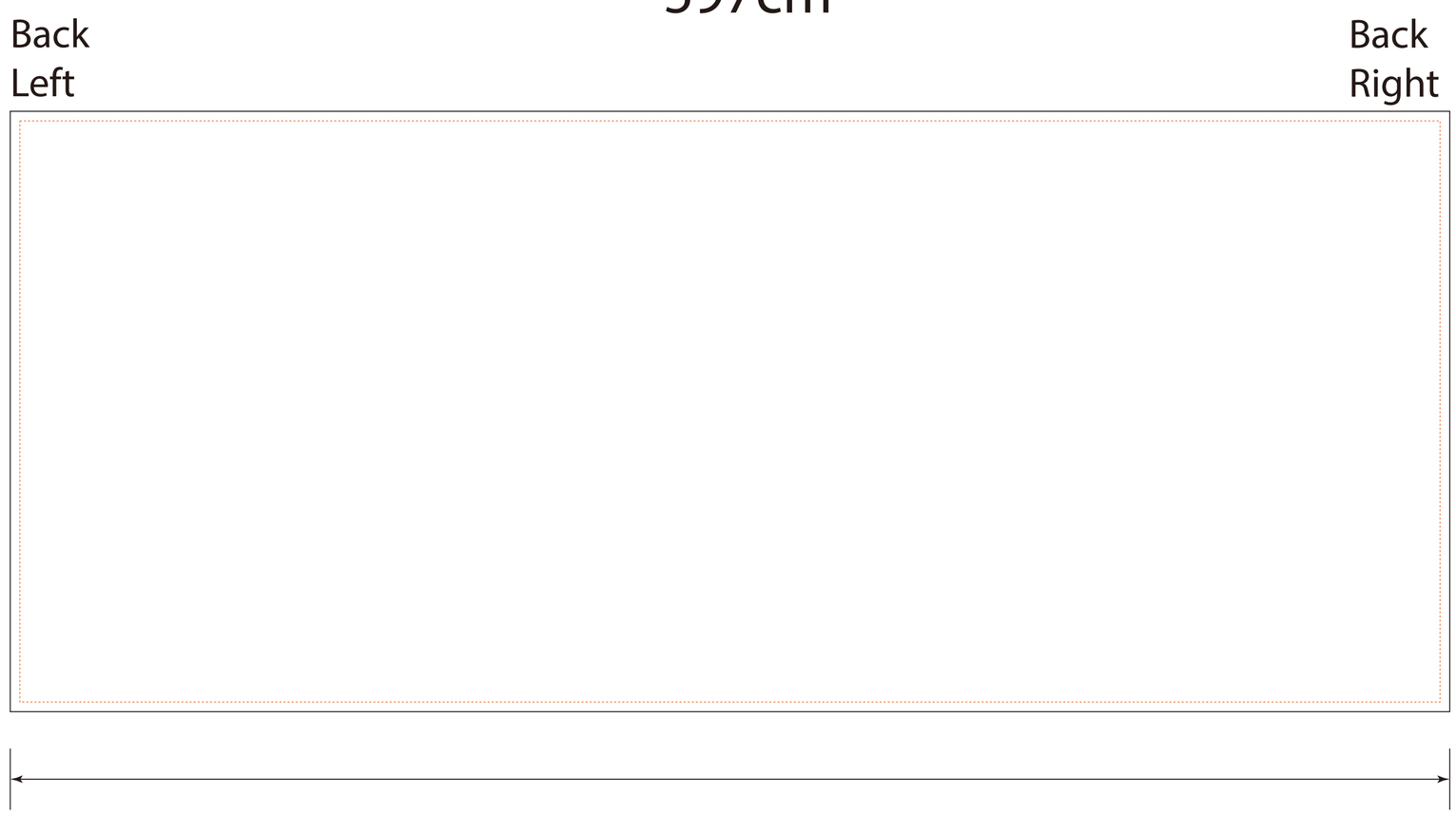
Back Left
Back Right
597cm