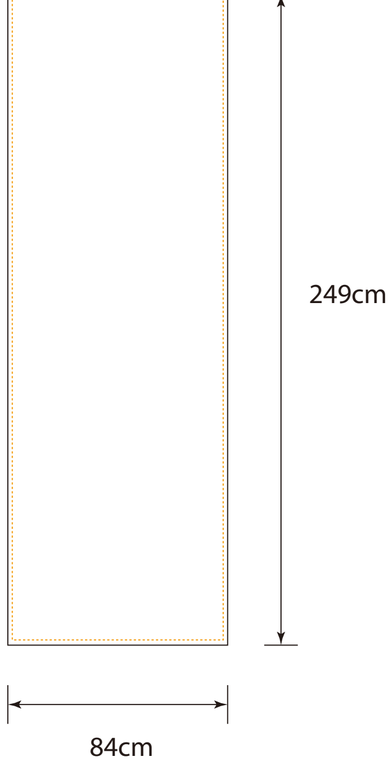

Front
Left

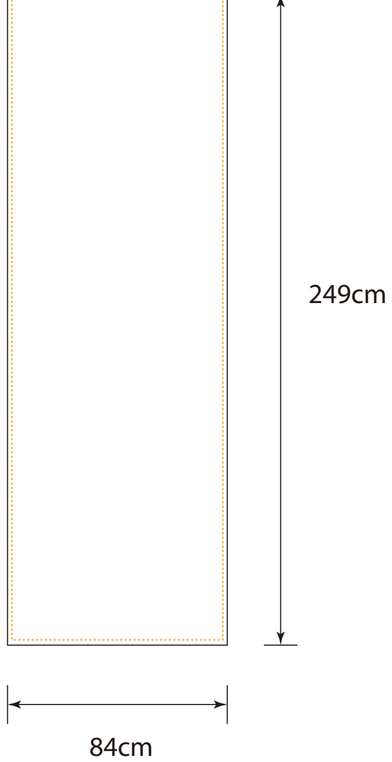

Front
Right

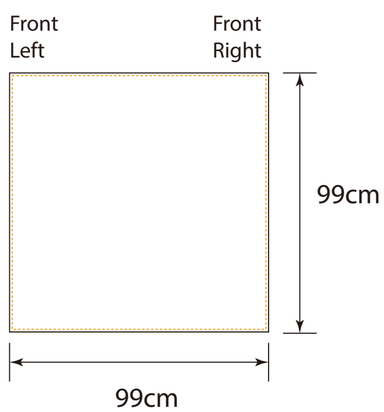

Back
Left

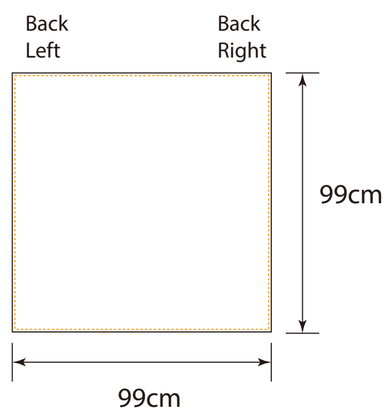

Back
Right

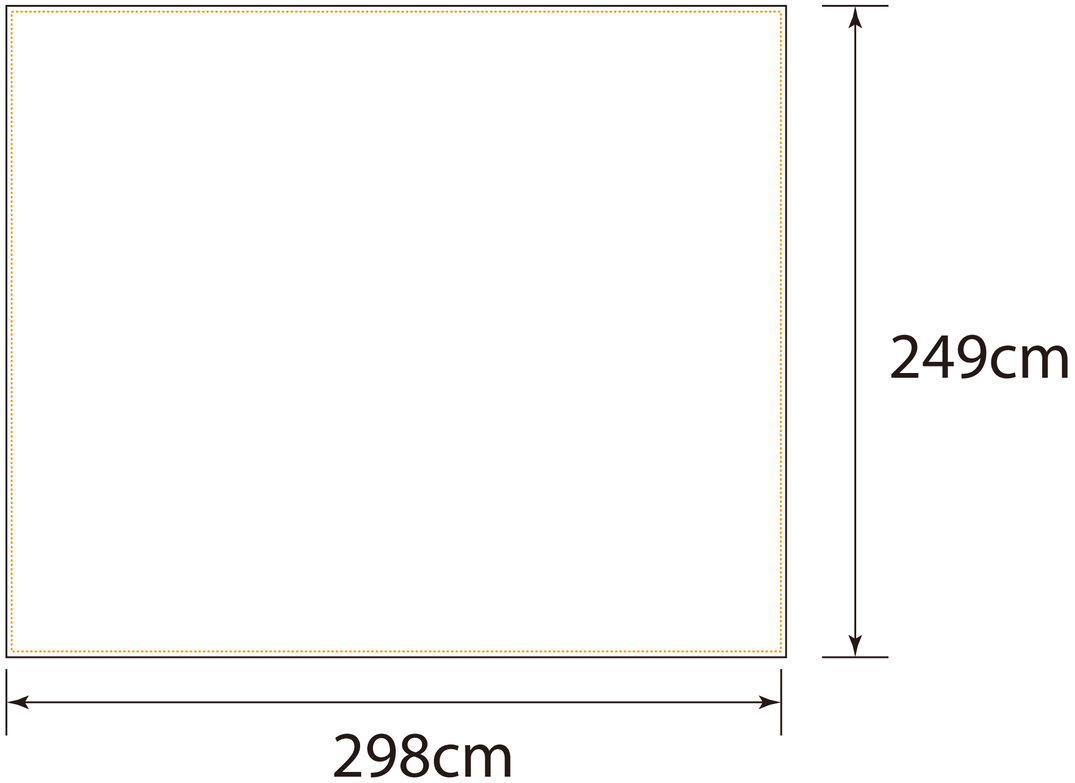

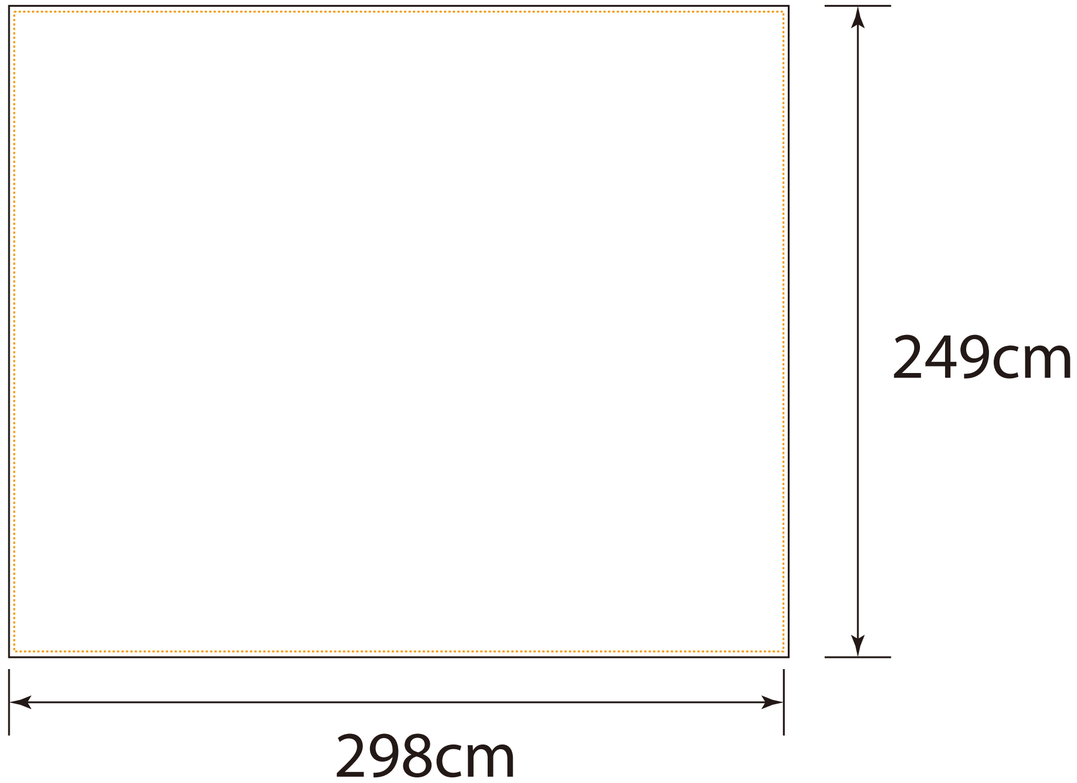

Front
Left

Front
Right

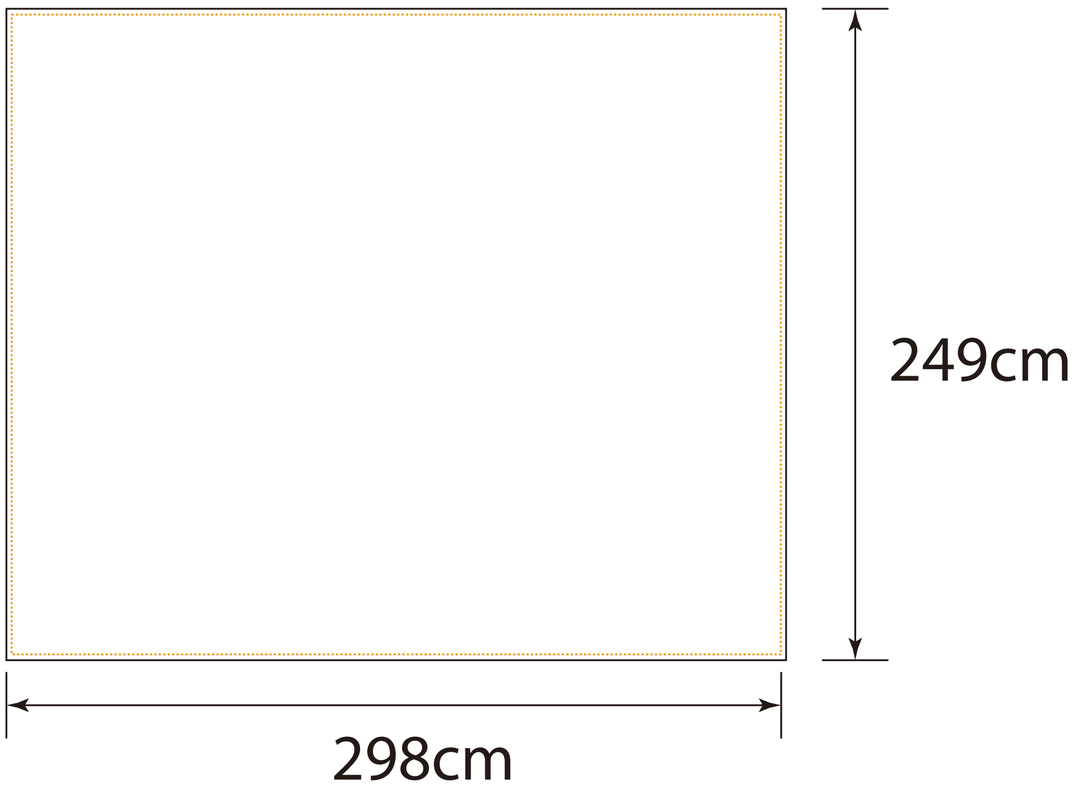

Back
Left
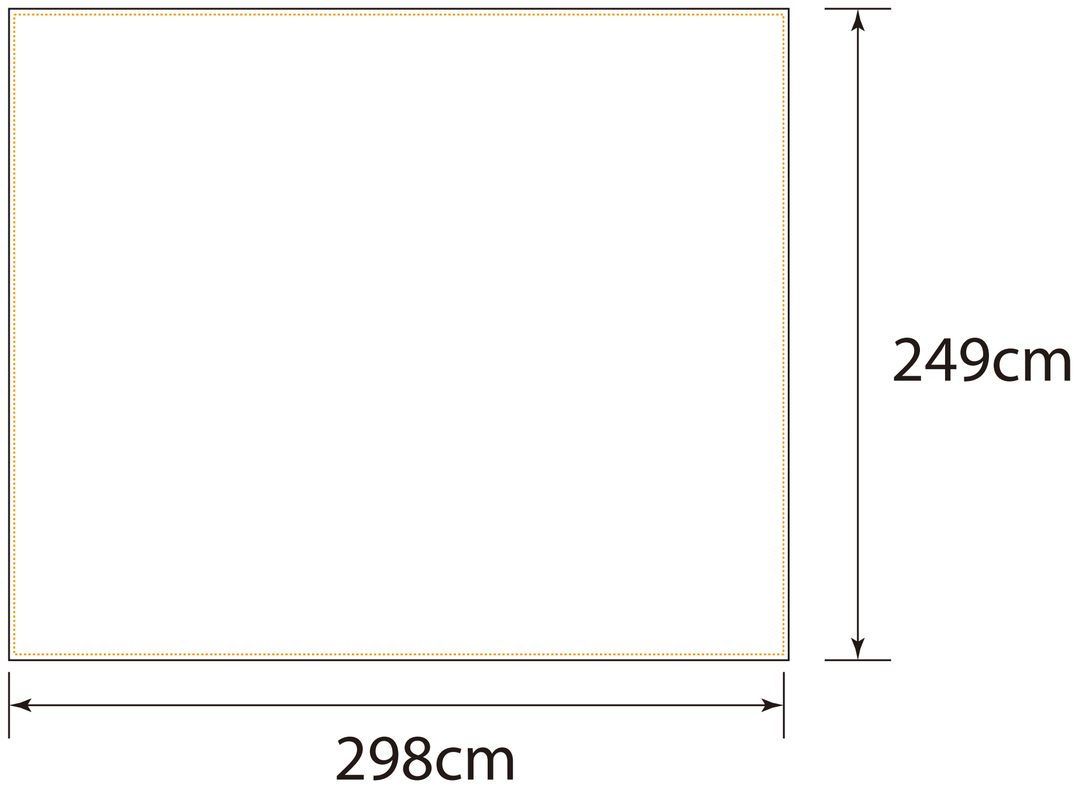
Back
Right