1:2

Business
Conference
Women Week
Business
Conference
Women Week

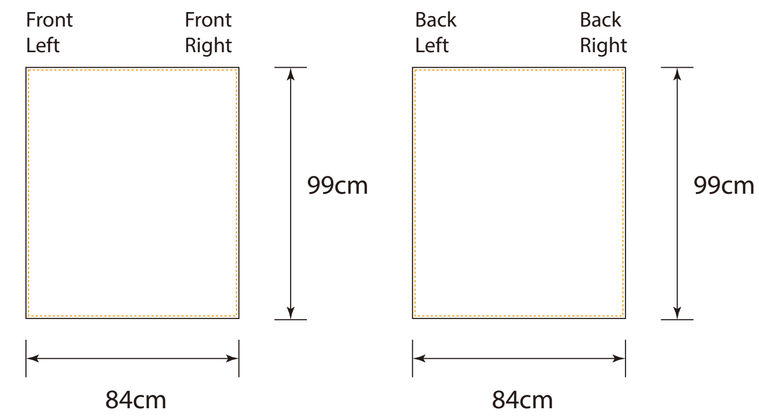
Front
Left
Front
Right
99cm
84cm
Back
Left
Back
Right
99cm
84cm

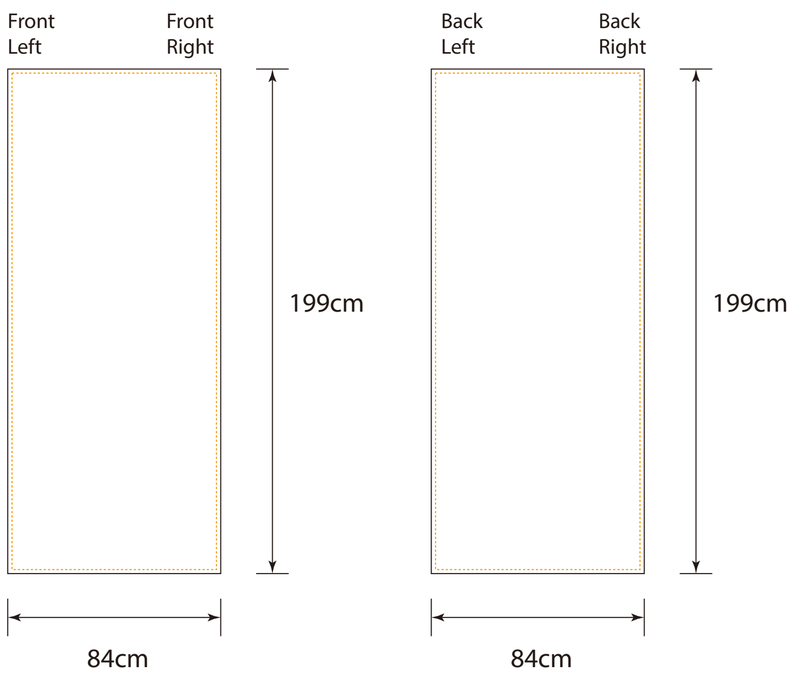
Front
Left
Front
Right
199cm
84cm
Back
Left
Back
Right
199cm
84cm

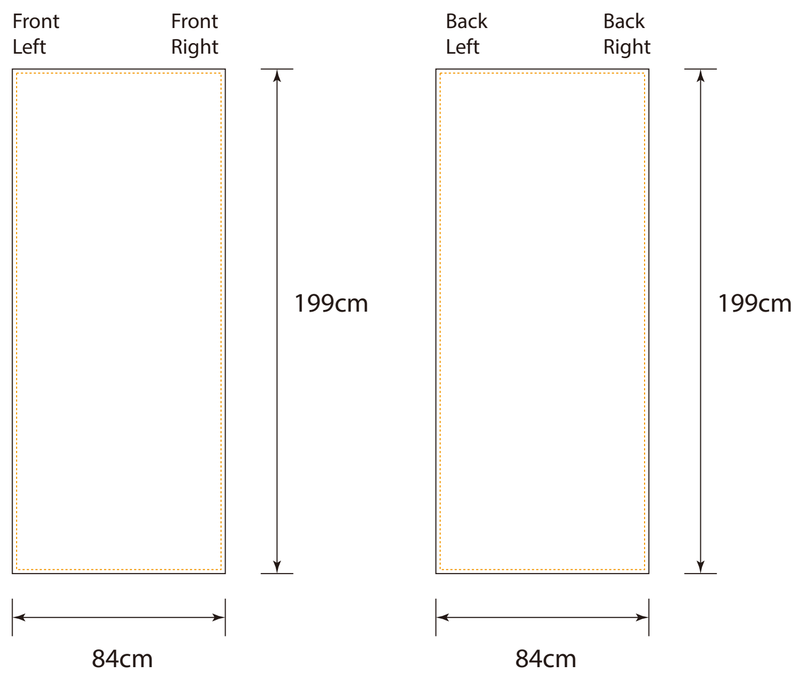
Front
Left
Front
Right
199cm
84cm
Back
Left
Back
Right
199cm
84cm

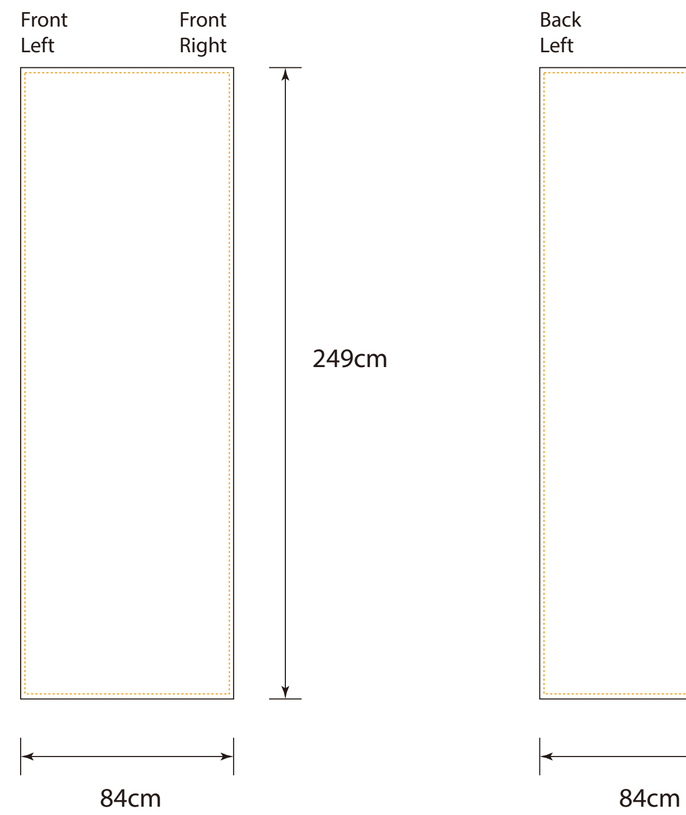
Front
Left
Front
Right
249cm
84cm
Back
Left
84cm

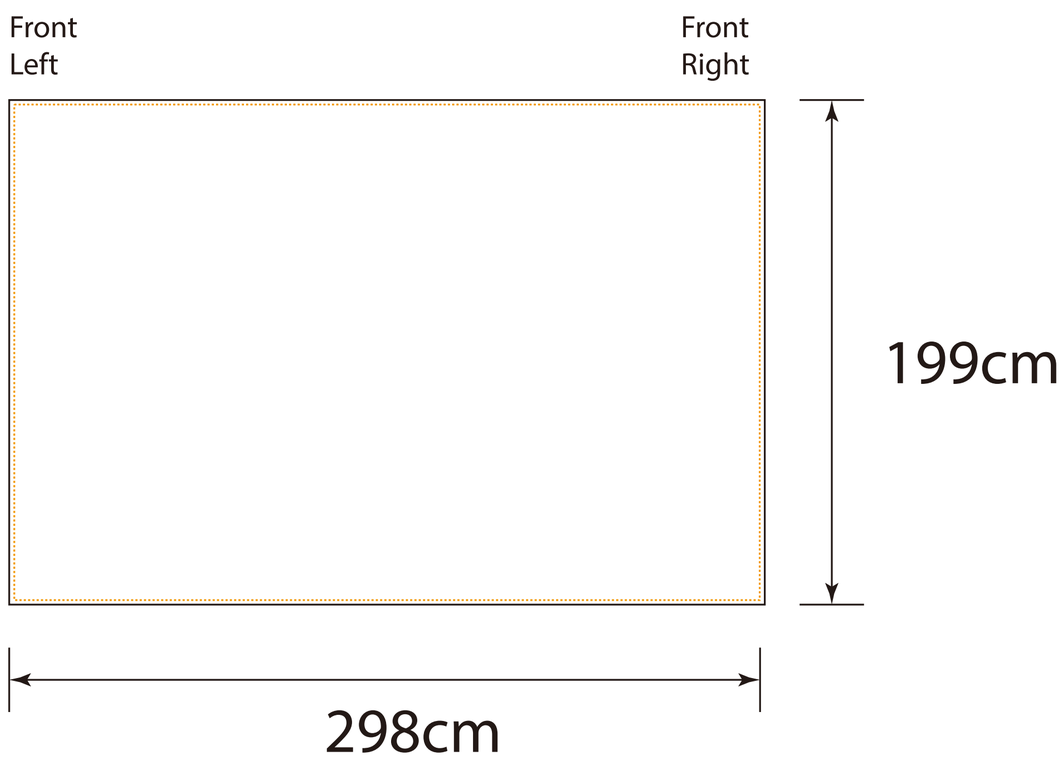
Front
Left
Front
Right
199cm
298cm

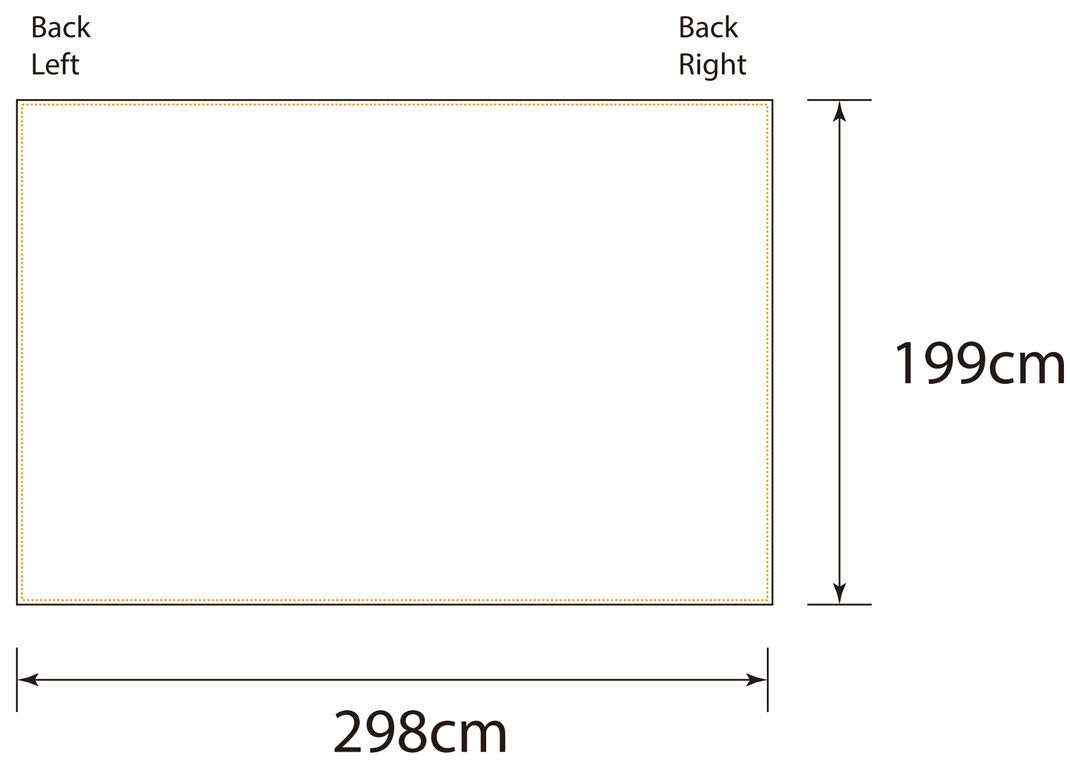
Back
Left
Back
Right
199cm
298cm