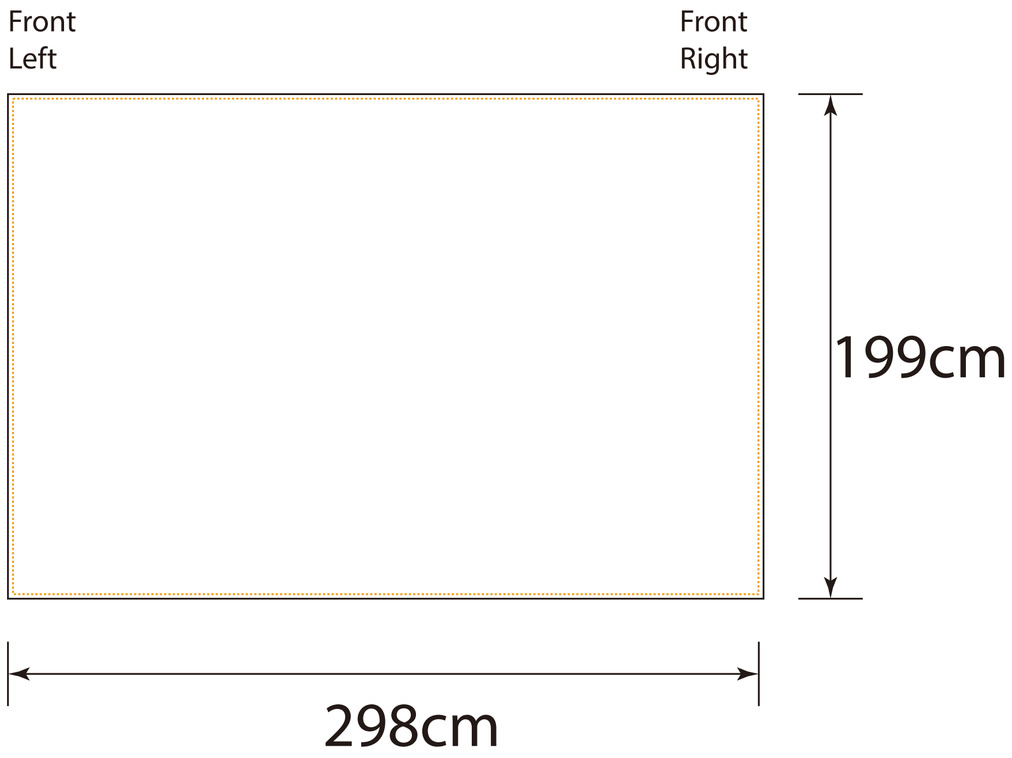
Front
Left
Front
Right
199cm
298cm

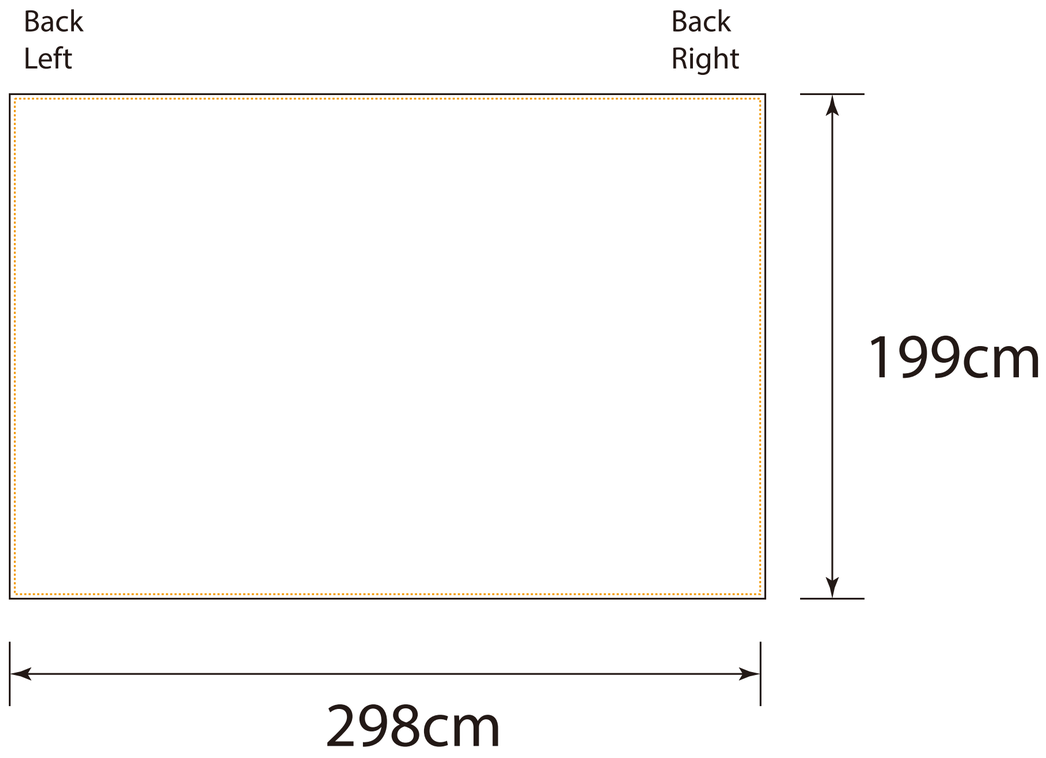
Back
Left
Back
Right
199cm
298cm

Business
Conference
Women Wee

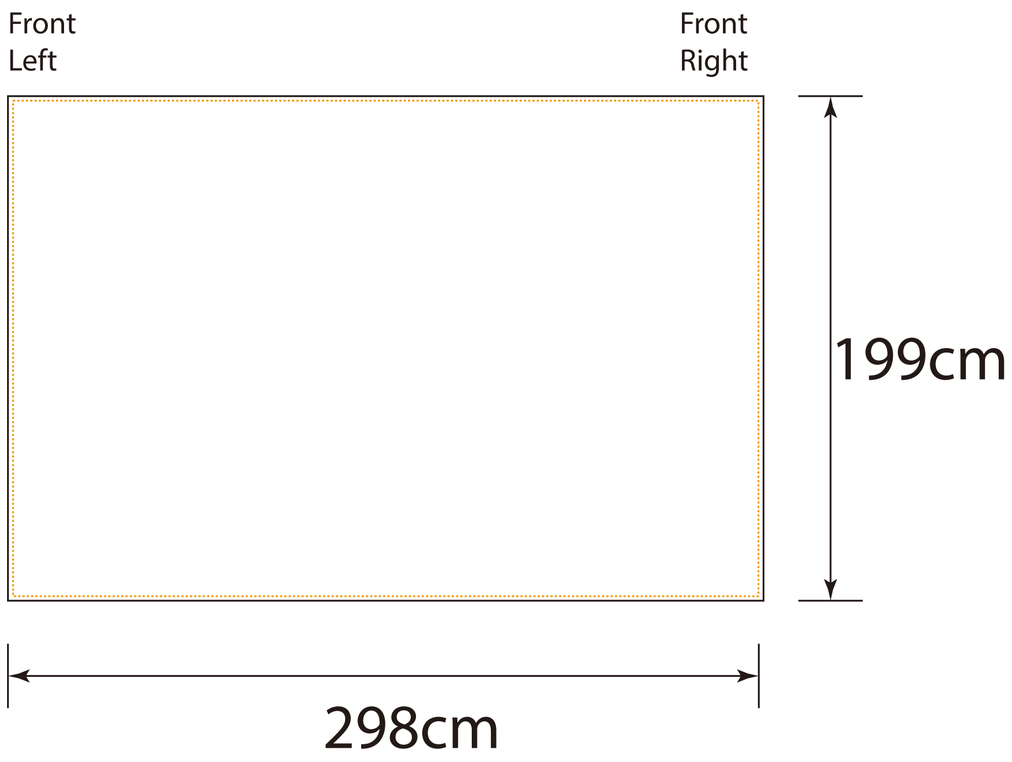
Front
Left
Front
Right
199cm
298cm

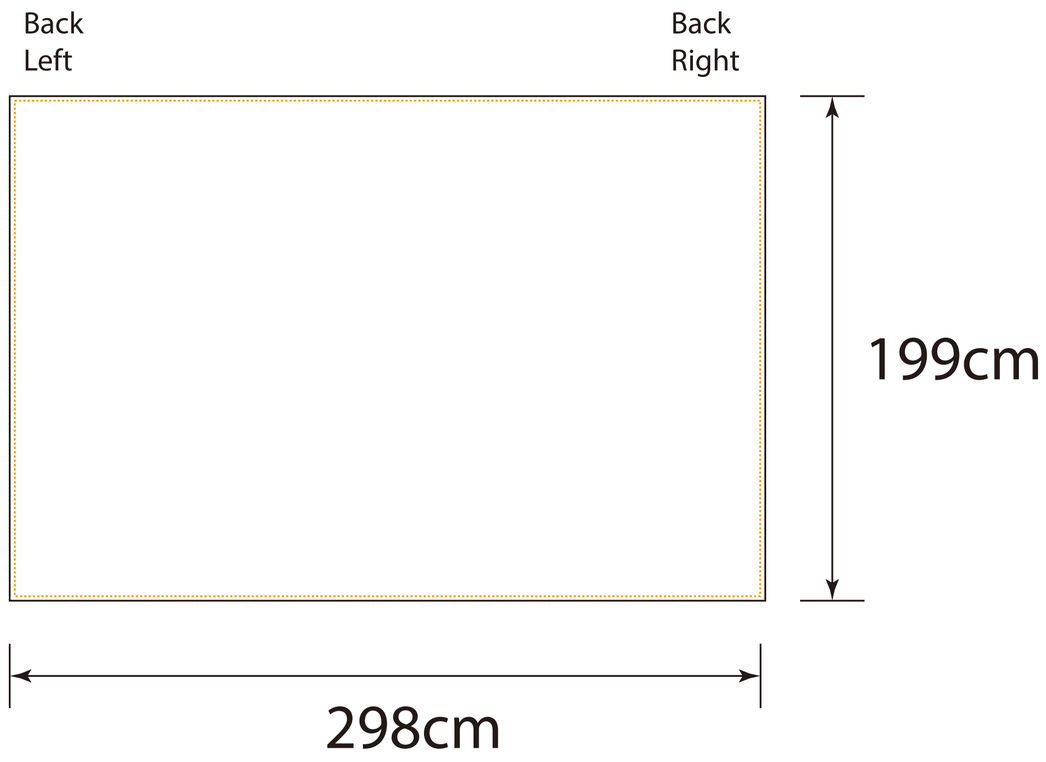
Back
Left
Back
Right
199cm
298cm

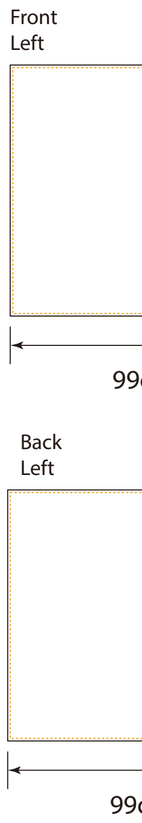
Front
Left
Back
Left

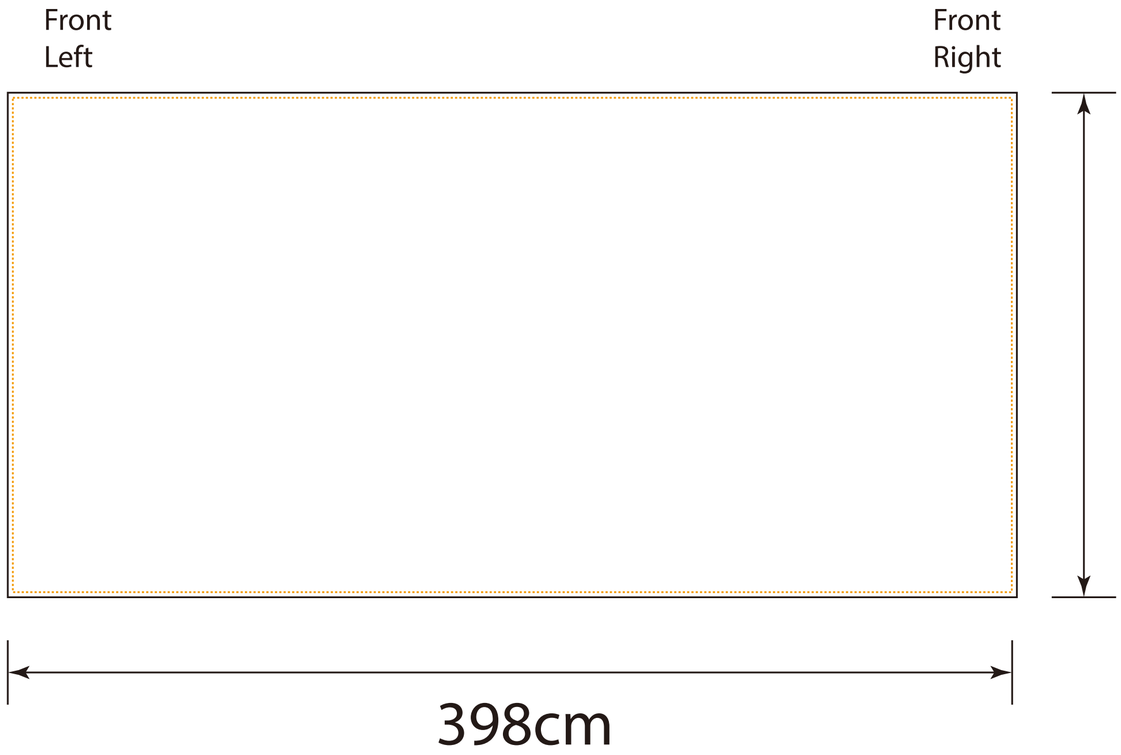
Front
Left
Front
Right
199cm
398cm

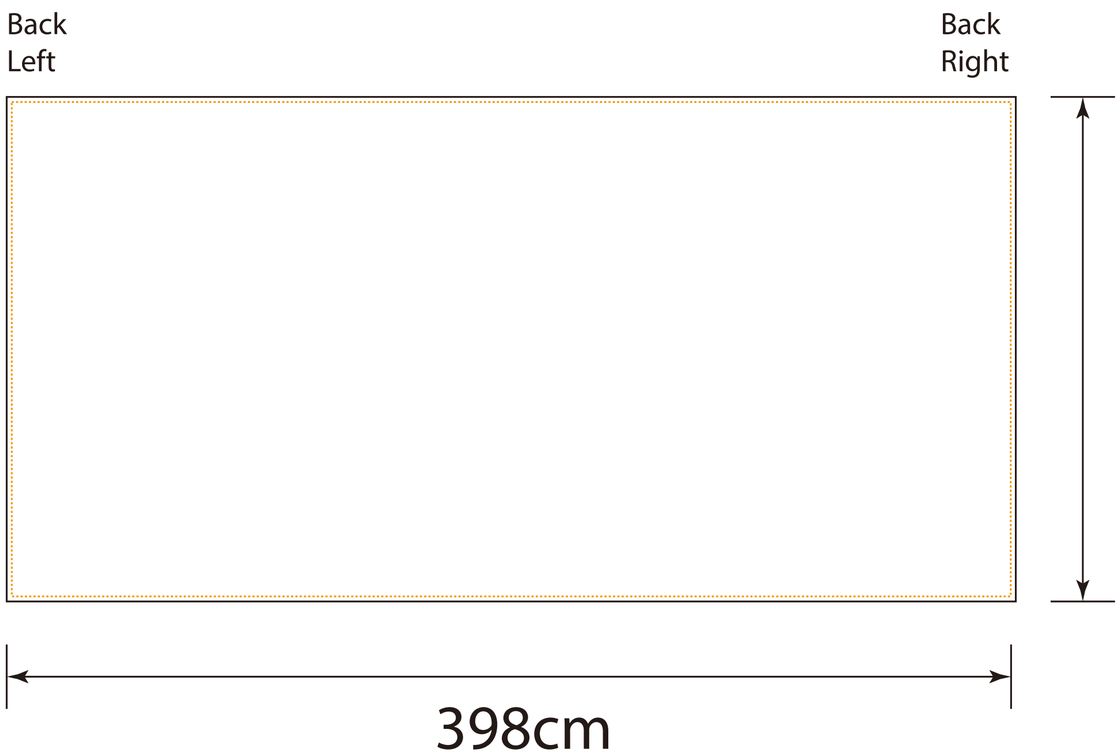
Back
Left
Back
Right
398cm