1:2

Business
Conference

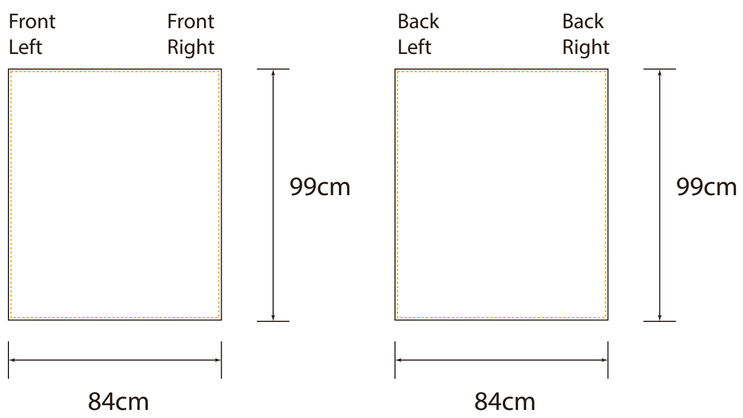
Front Left
Front Right
99cm
84cm
Back Left
Back Right
99cm
84cm

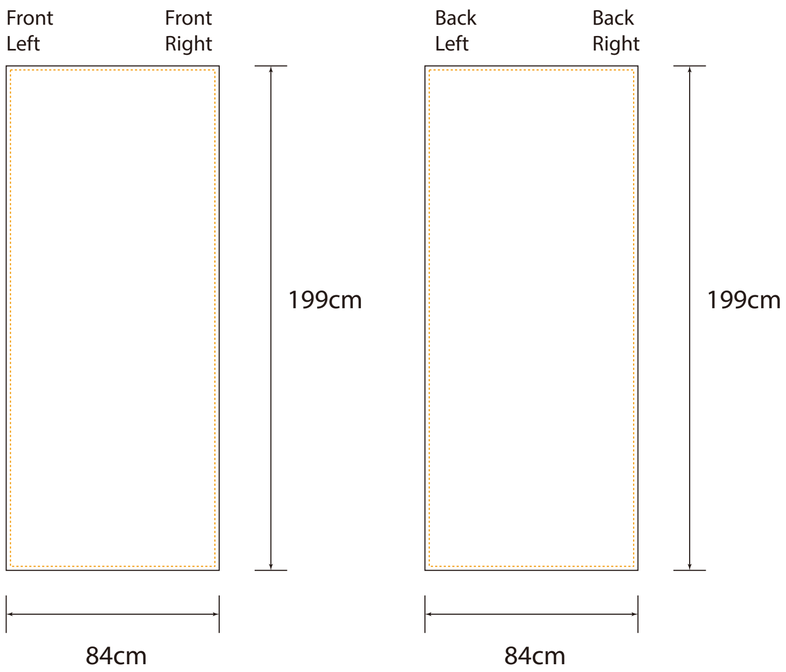
Front Left
Front Right
199cm
84cm
Back Left
Back Right
199cm
84cm

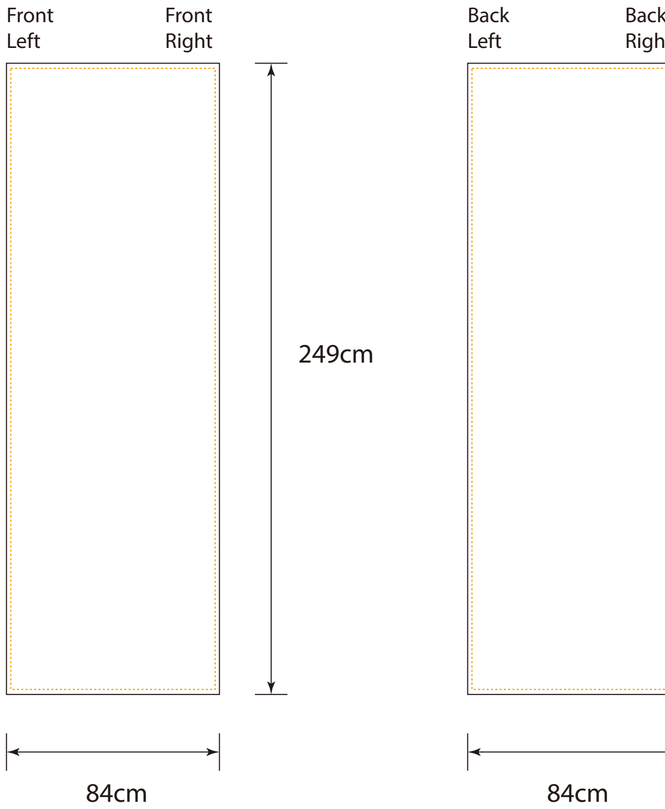
Front Left
Front Right
249cm
84cm
Back Left
84cm

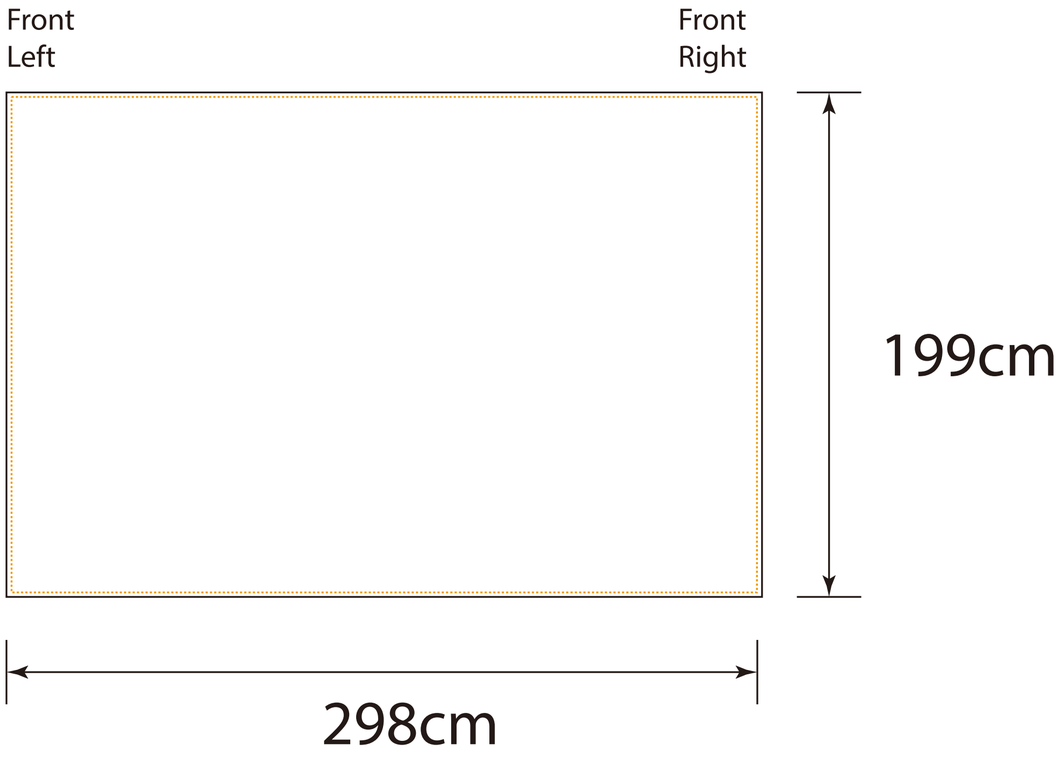
Front Left
Front Right
199cm
298cm

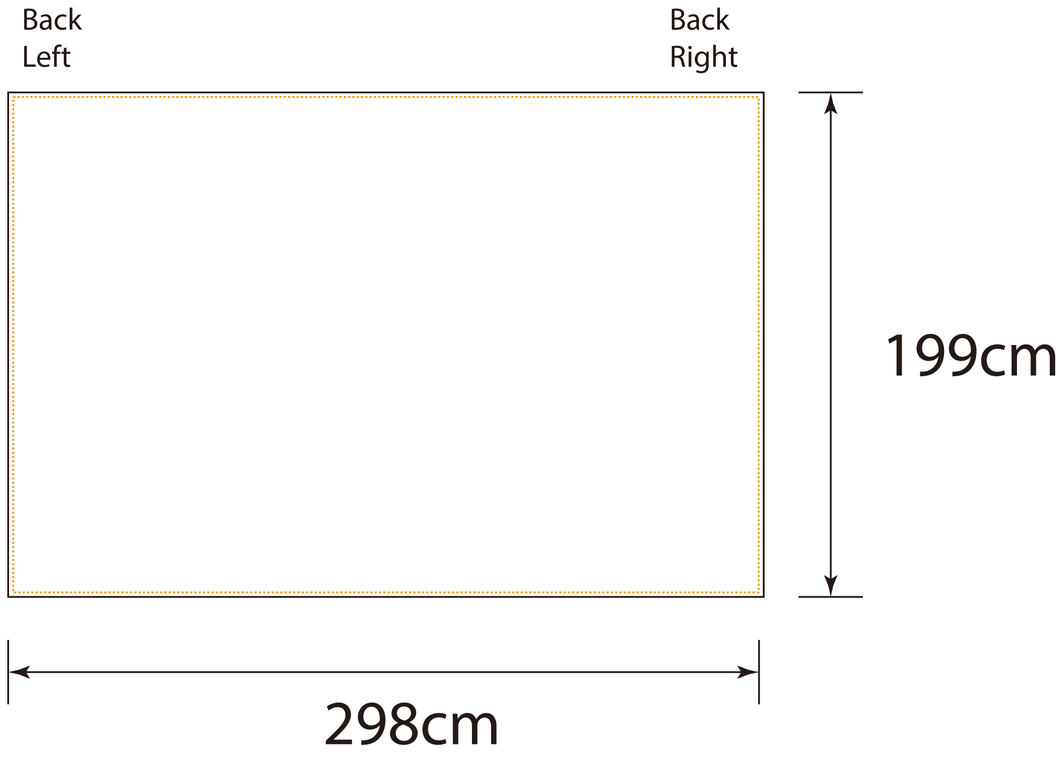
Back Left
Back Right
199cm
298cm