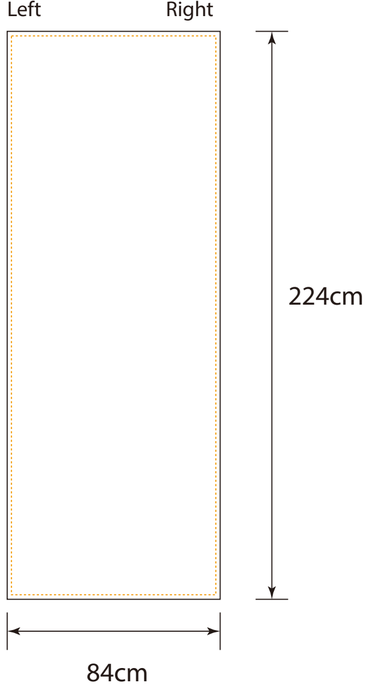
Left
Right
224cm
84cm

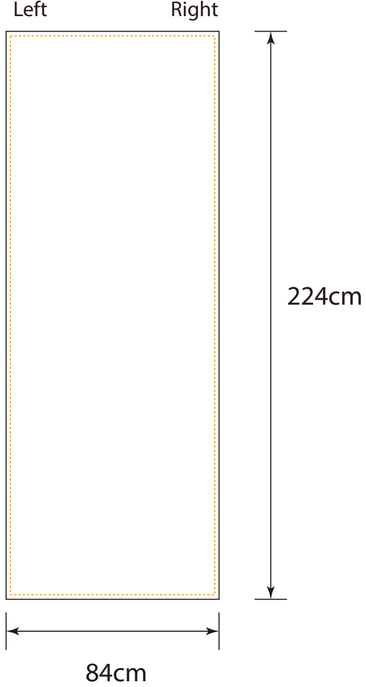
Left
Right
224cm
84cm

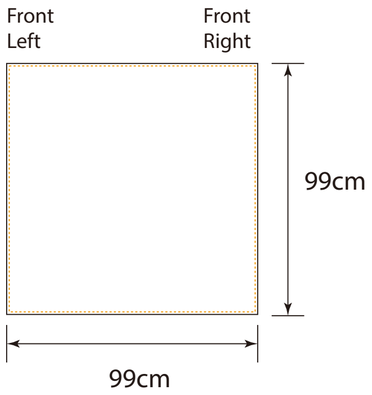
Front
Left
Front
Right
99cm
99cm

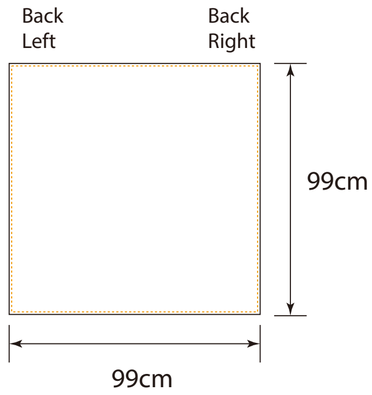
Back
Left
Back
Right
99cm
99cm

Business
Conference
Women Week

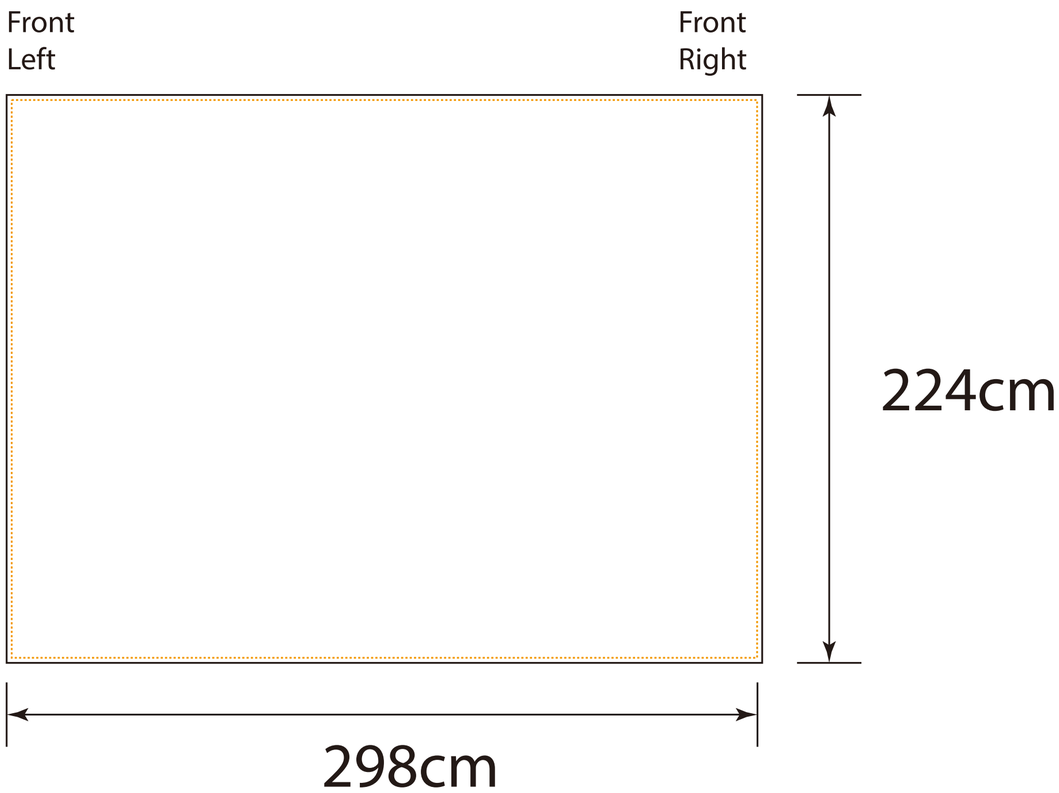
Front
Left
Front
Right
224cm
298cm

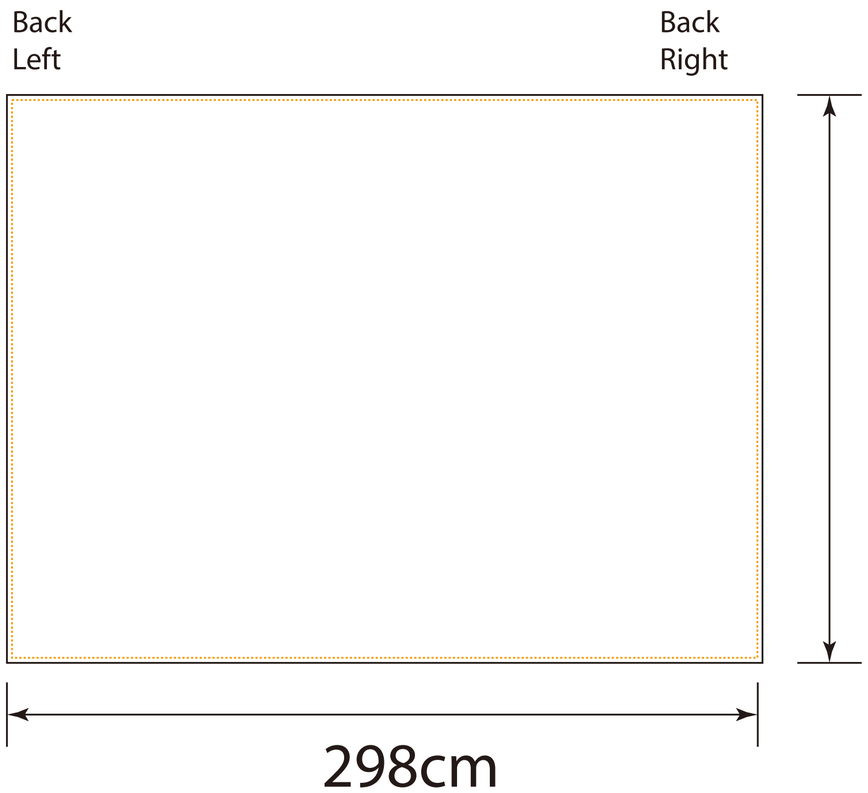
Back
Left
Back
Right
224cm
298cm

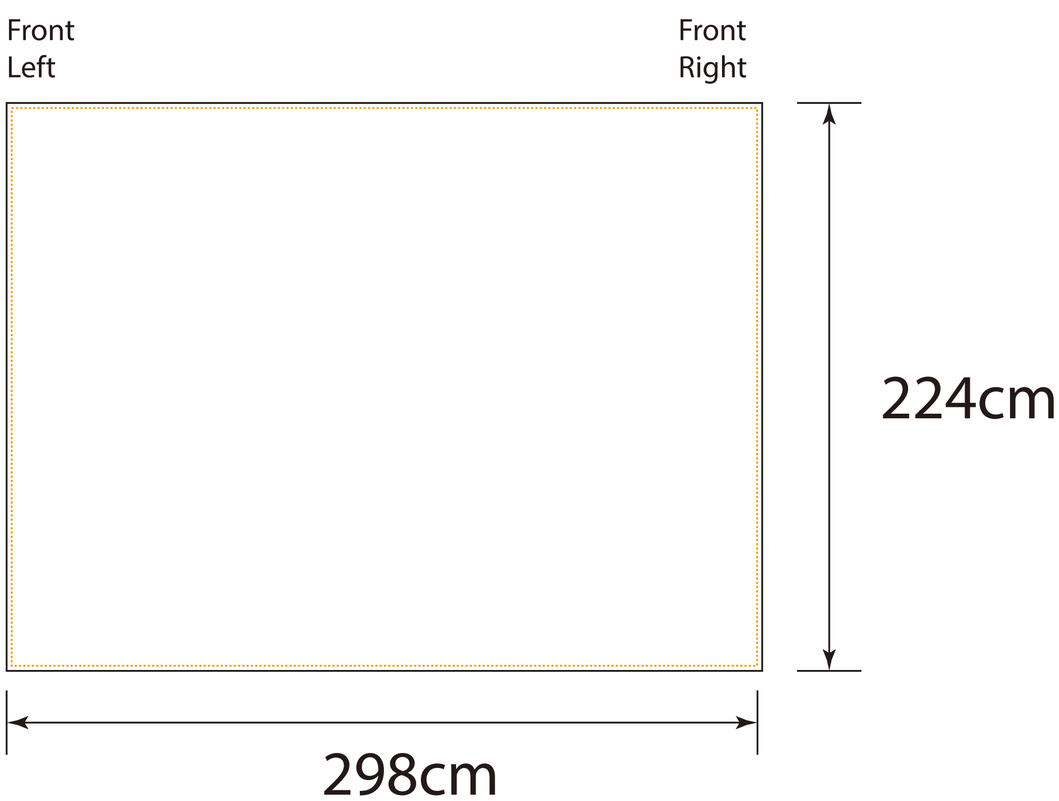
Front
Left
Front
Right
224cm
298cm

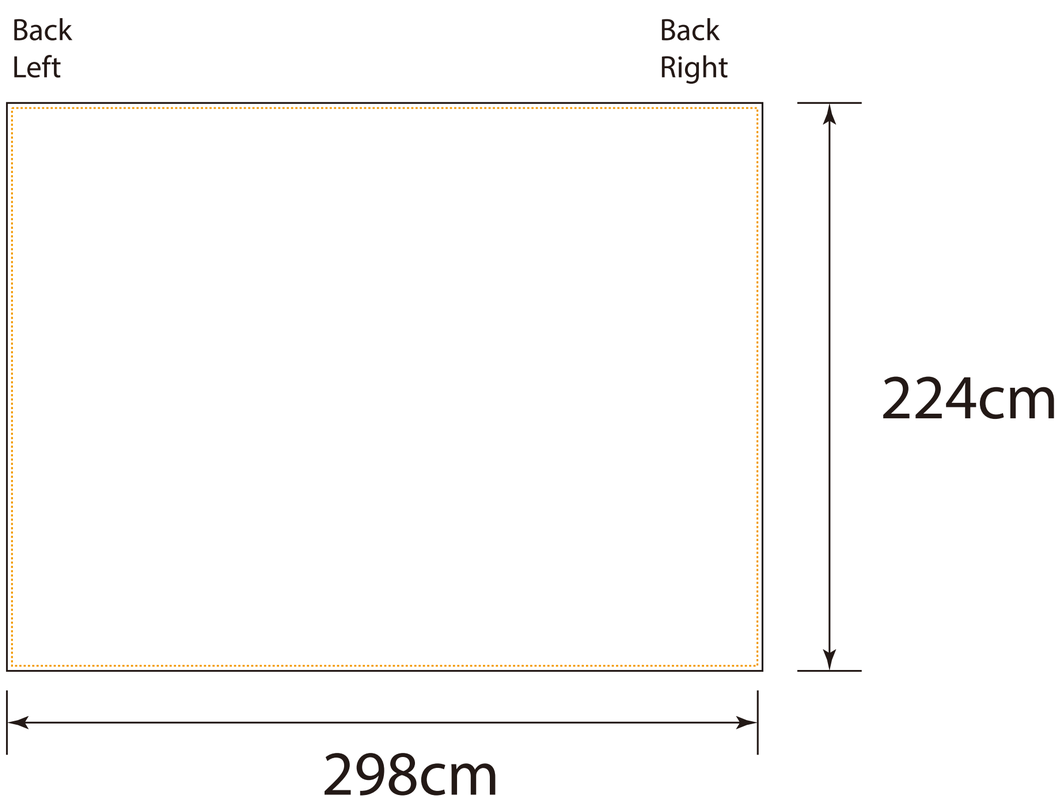
Back
Left
Back
Right
224cm
298cm