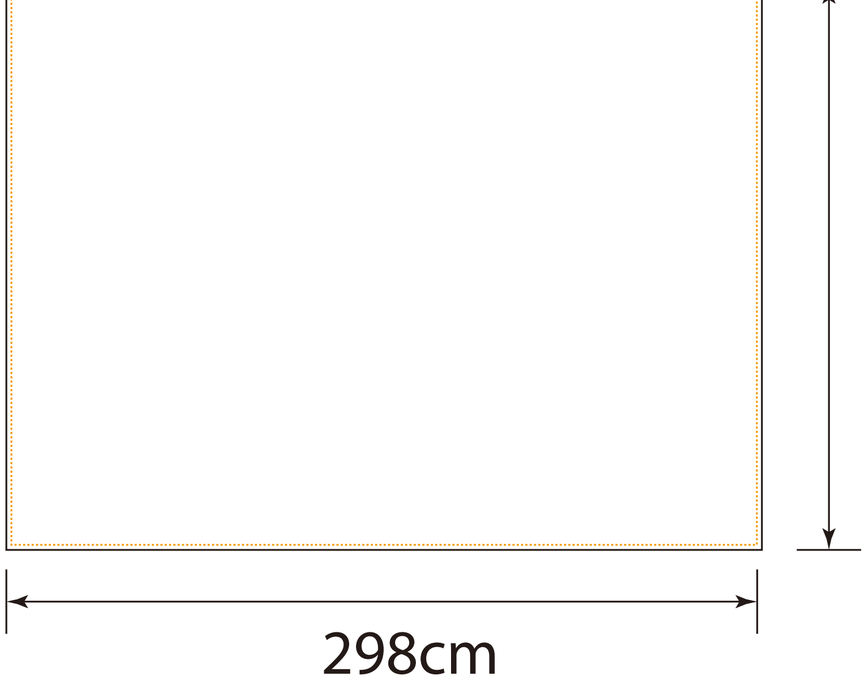
224cm
298cm

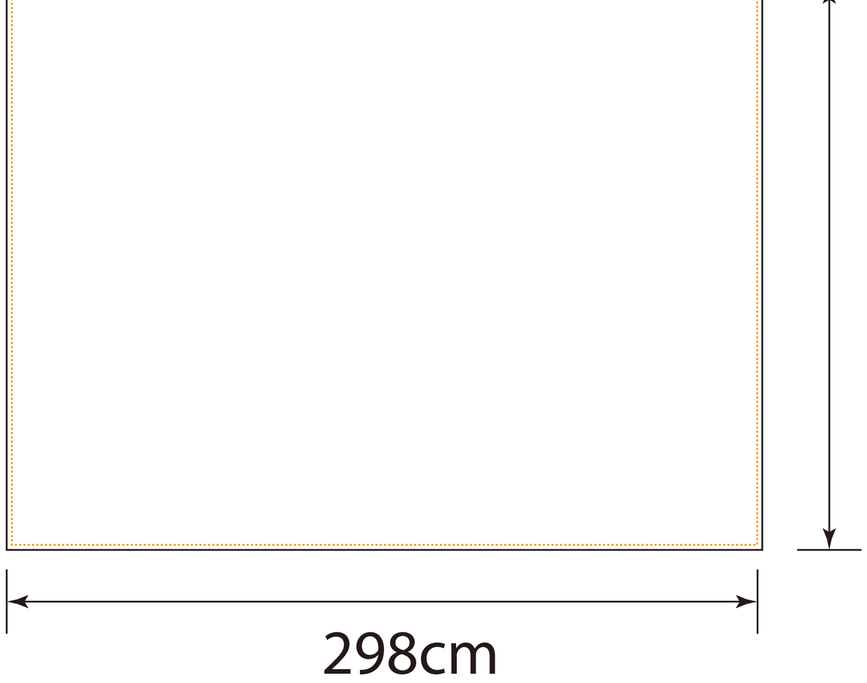
224cm
298cm

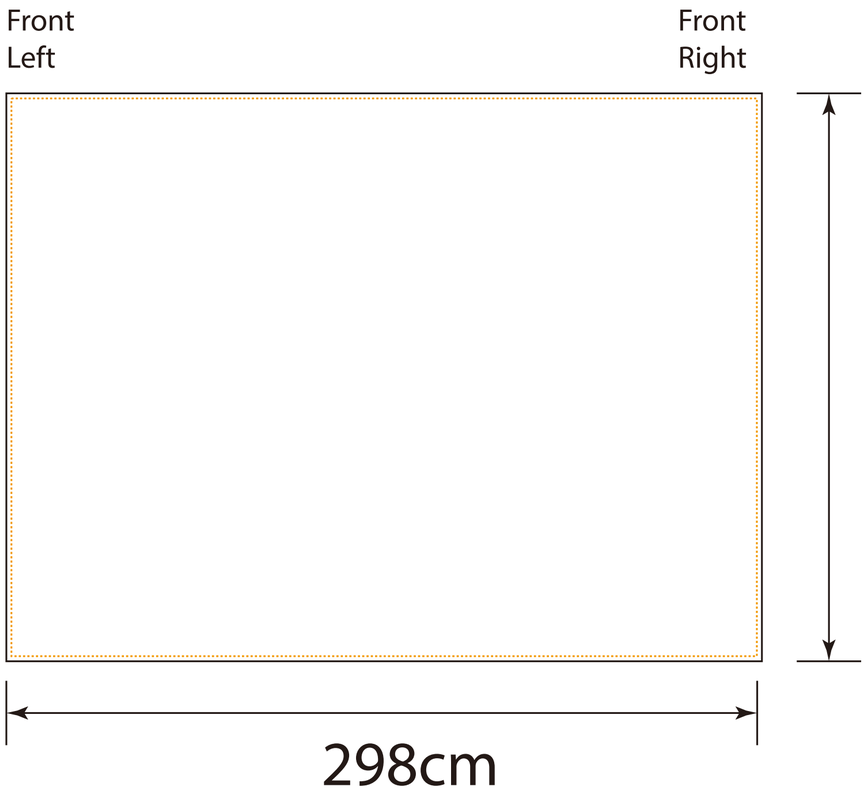
Front
Left
Front
Right
224cm
298cm

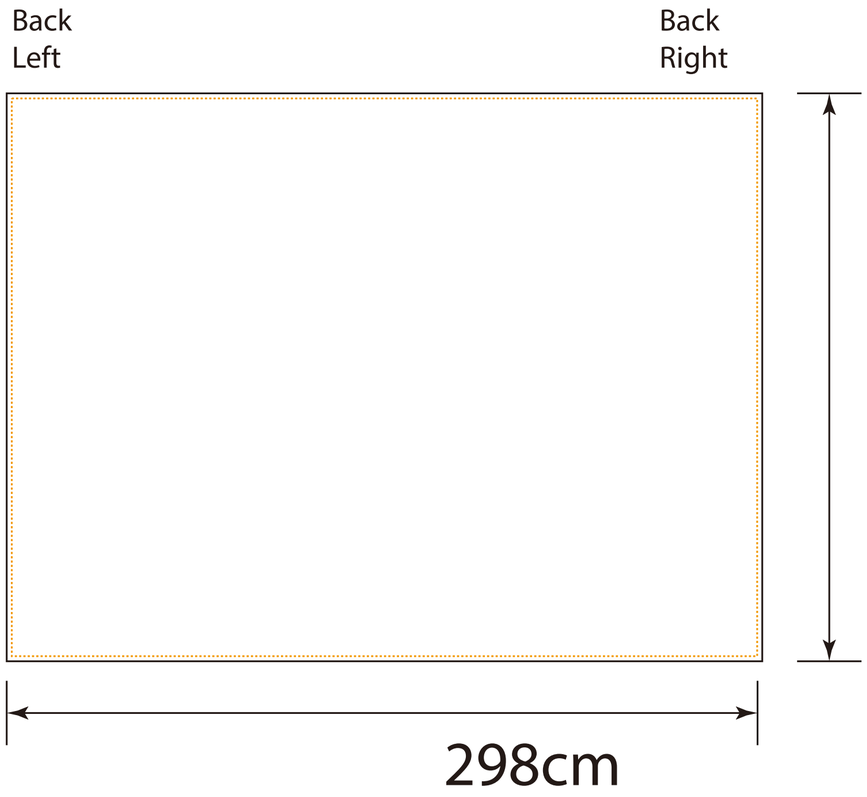
Back
Left
Back
Right
224cm
298cm

Front
Left

Back
Left

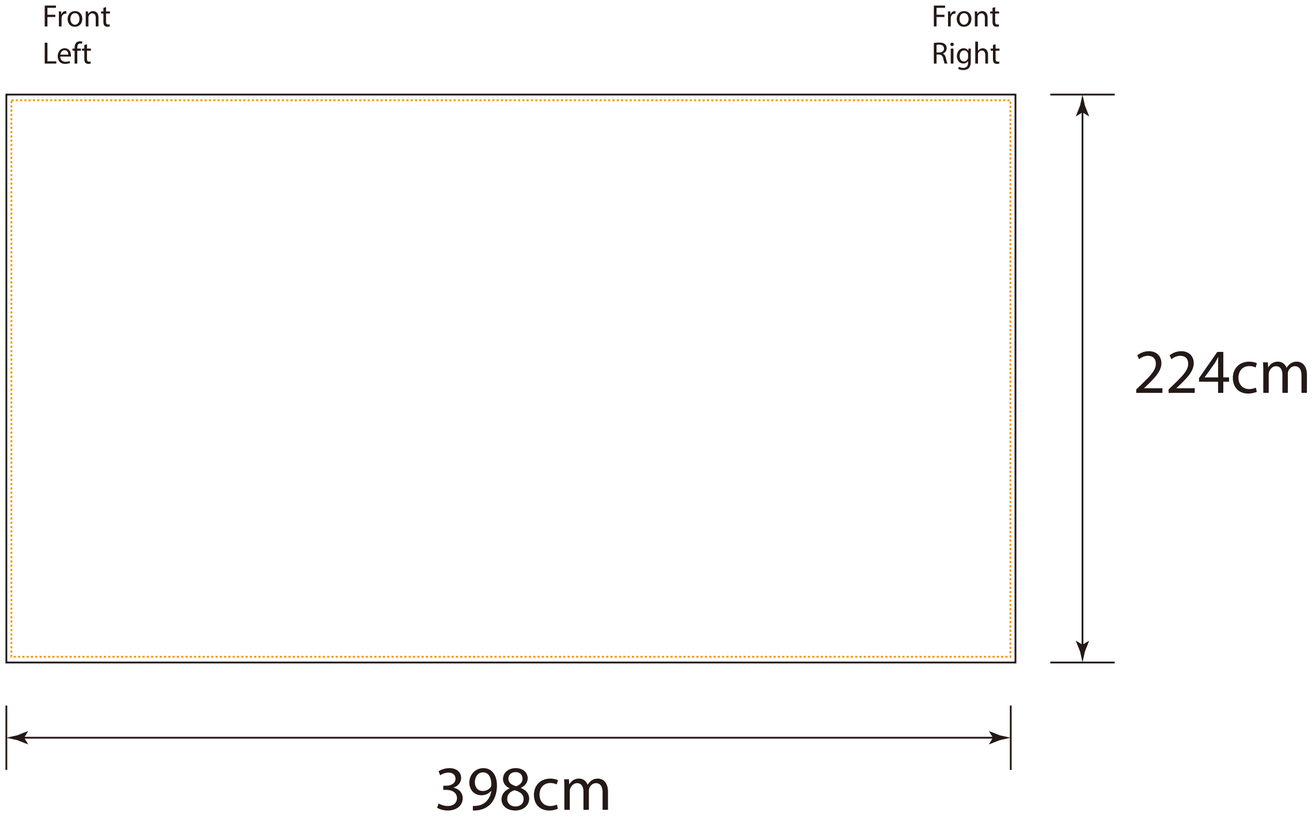
Front
Left
Front
Right
224cm
398cm

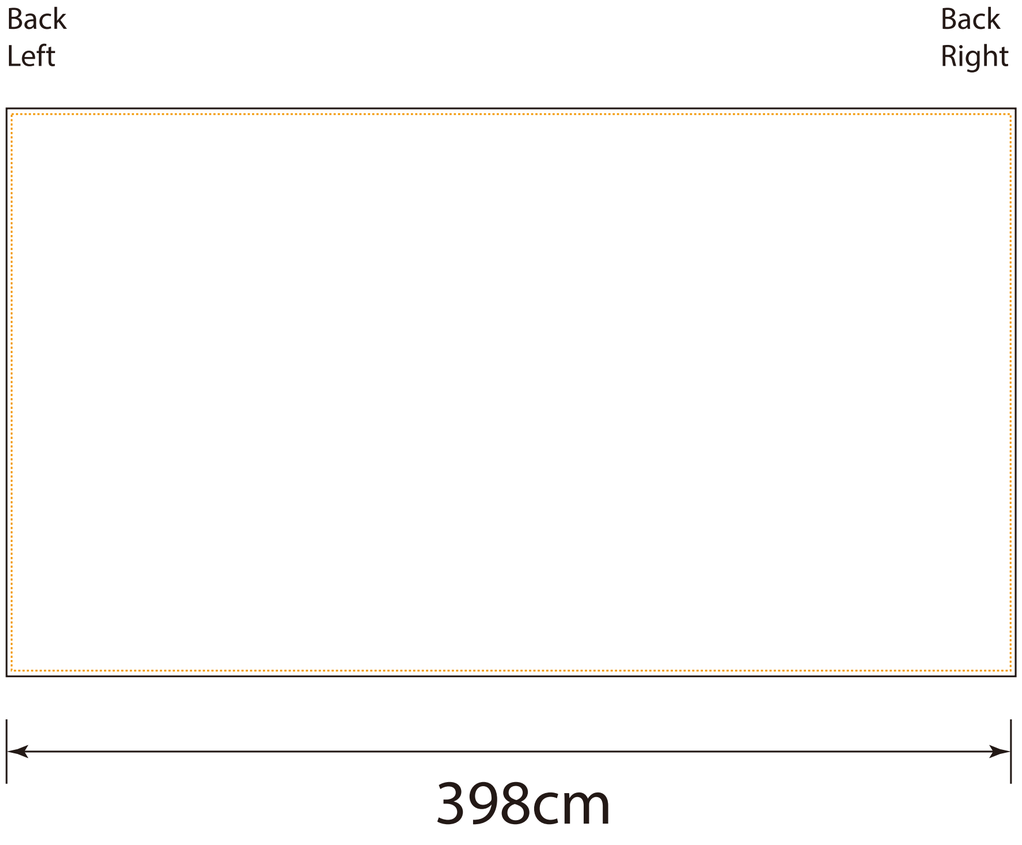
Back
Left
Back
Right
398cm