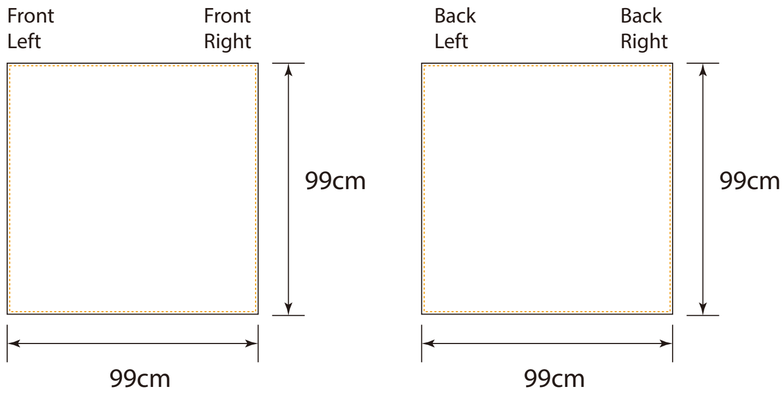
Front
Left
Front
Right
99cm
99cm
Back
Left
Back
Right
99cm
99cm

Business
Conference
Women Week

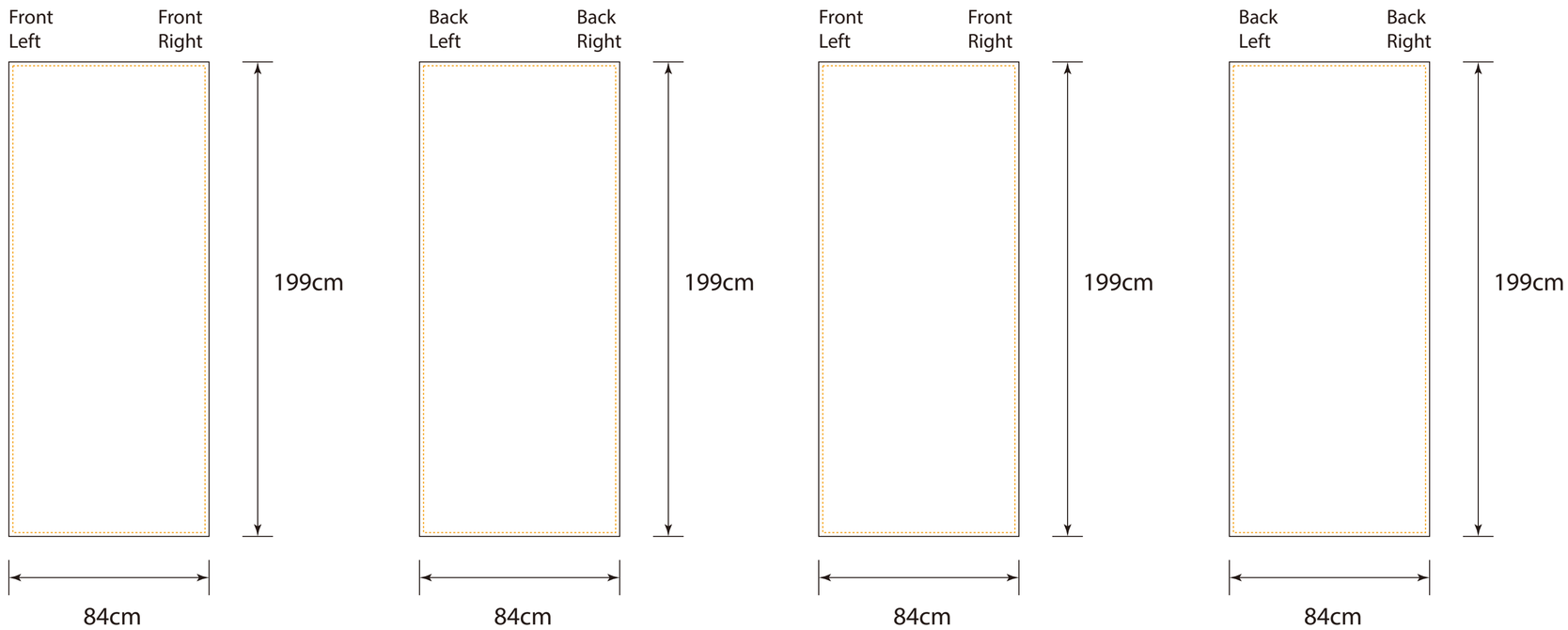
Front
Left
Front
Right
199cm
84cm
Back
Left
Back
Right
199cm
84cm
Front
Left
Front
Right
199cm
84cm
Back
Left
Back
Right
199cm
84cm

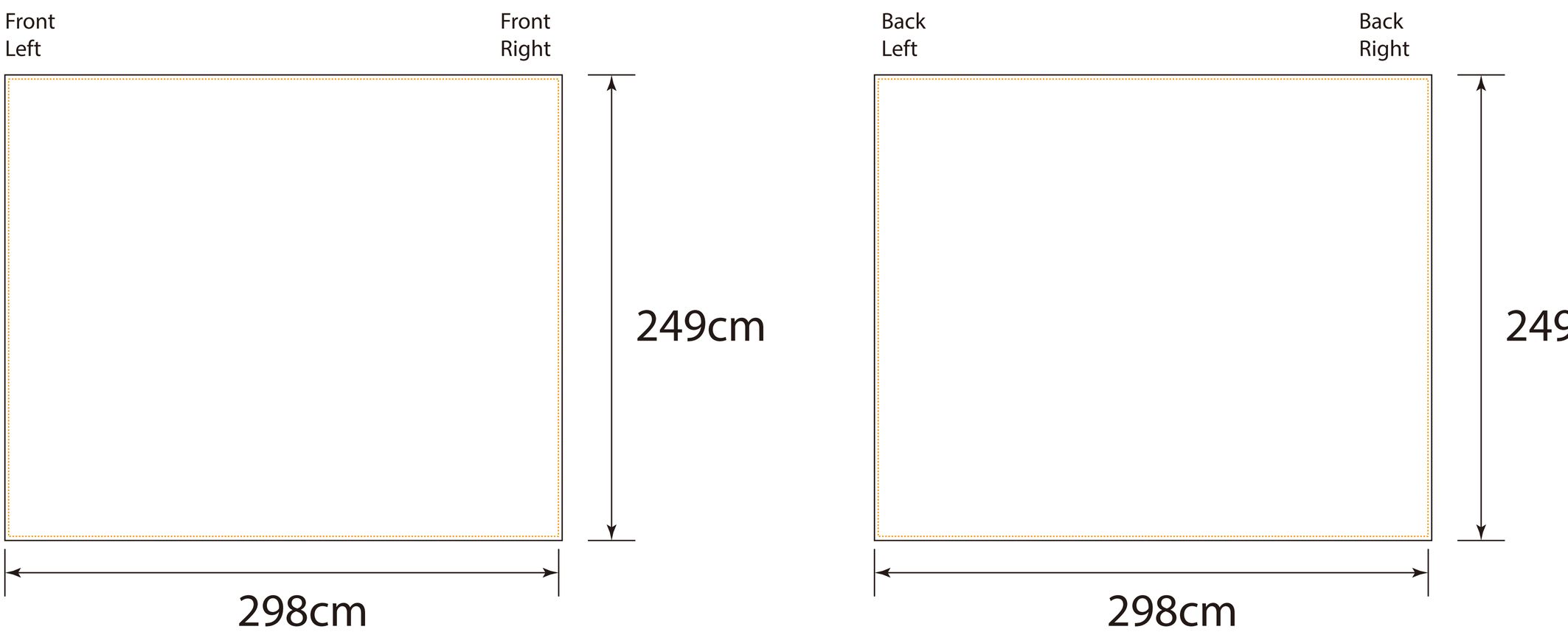
Front
Left
Front
Right
249cm
298cm
Back
Left
Back
Right
249
298cm