1: 2

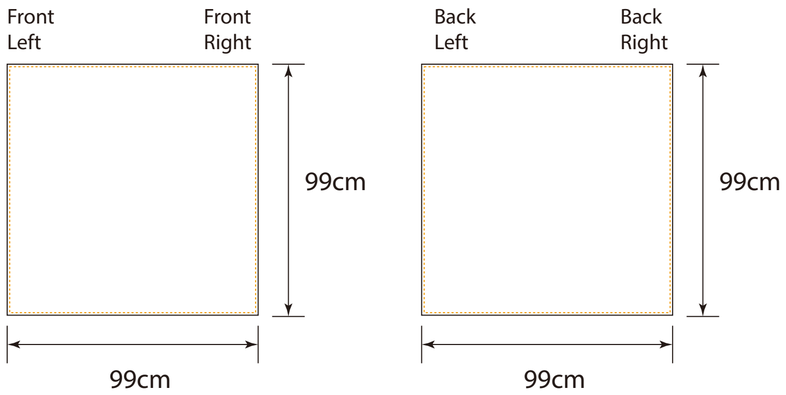
Front
Left
Front
Right
99cm
99cm
Back
Left
Back
Right
99cm
99cm

W
BRAND
Business
Conference
Women Week

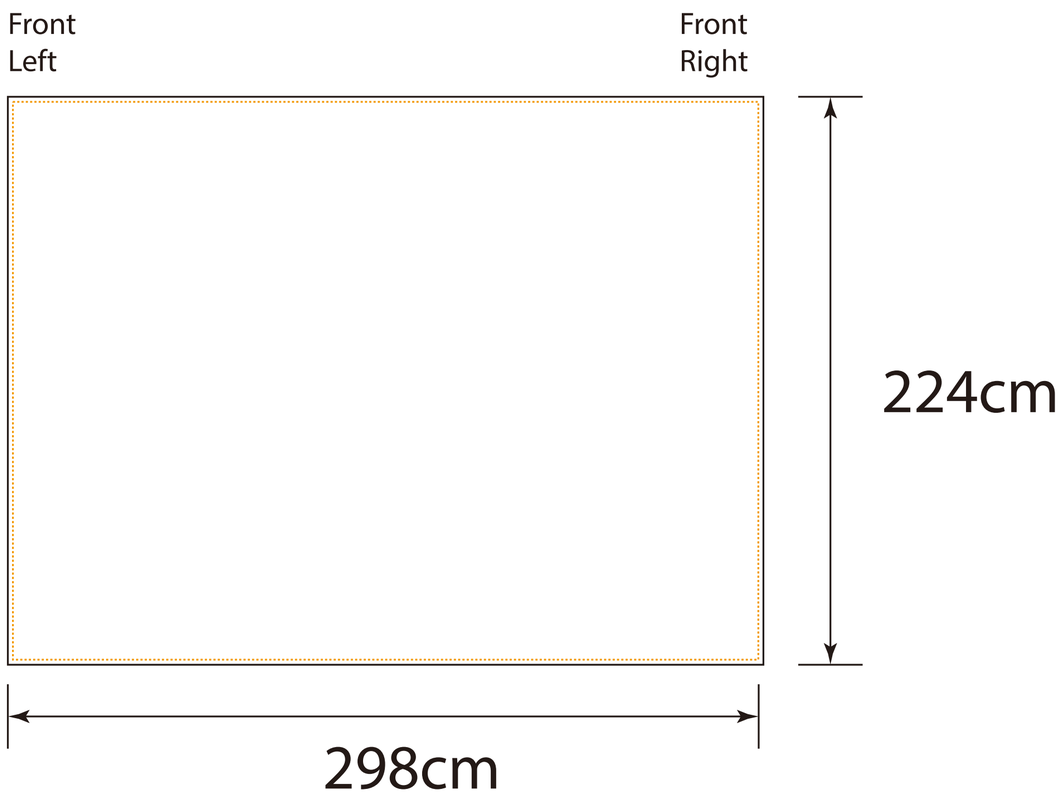
Front
Left
Front
Right
224cm
298cm

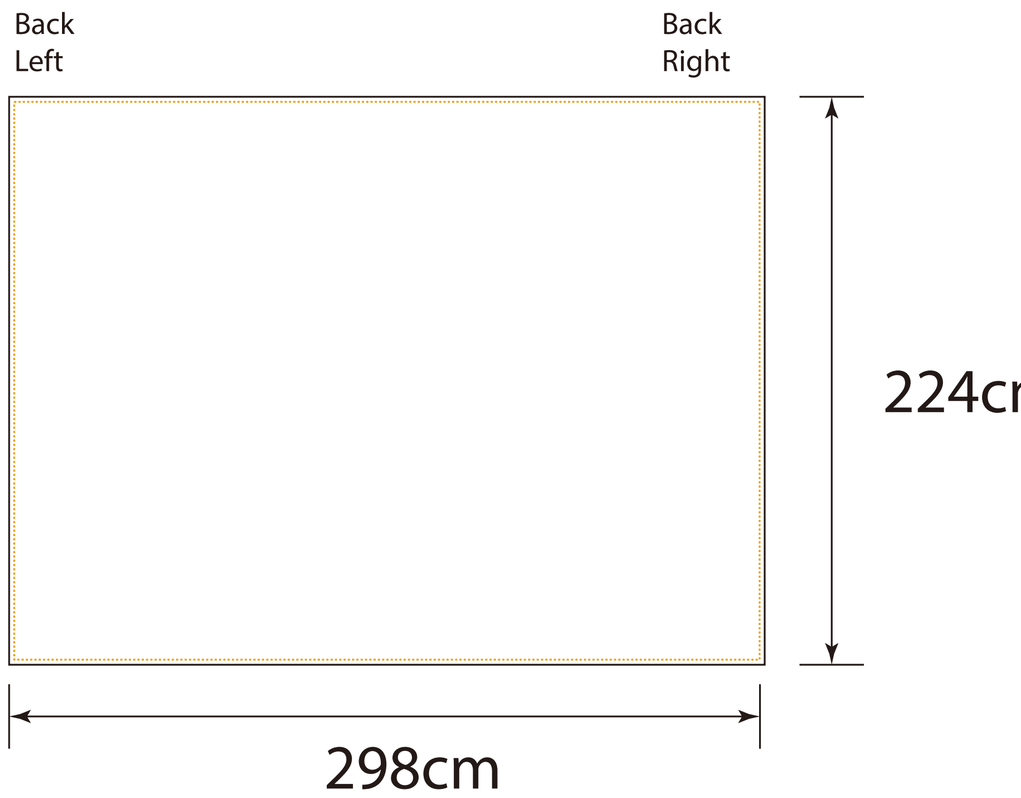
Back
Left
Back
Right
224cm
298cm

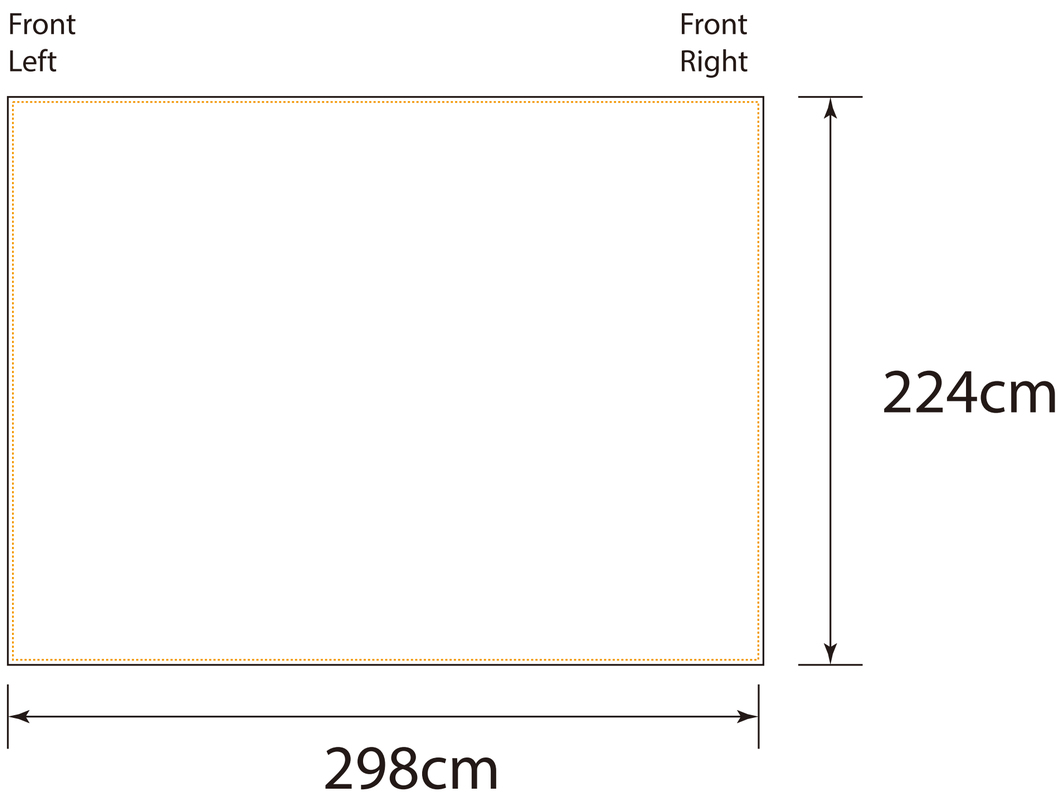
Front
Left
Front
Right
224cm
298cm

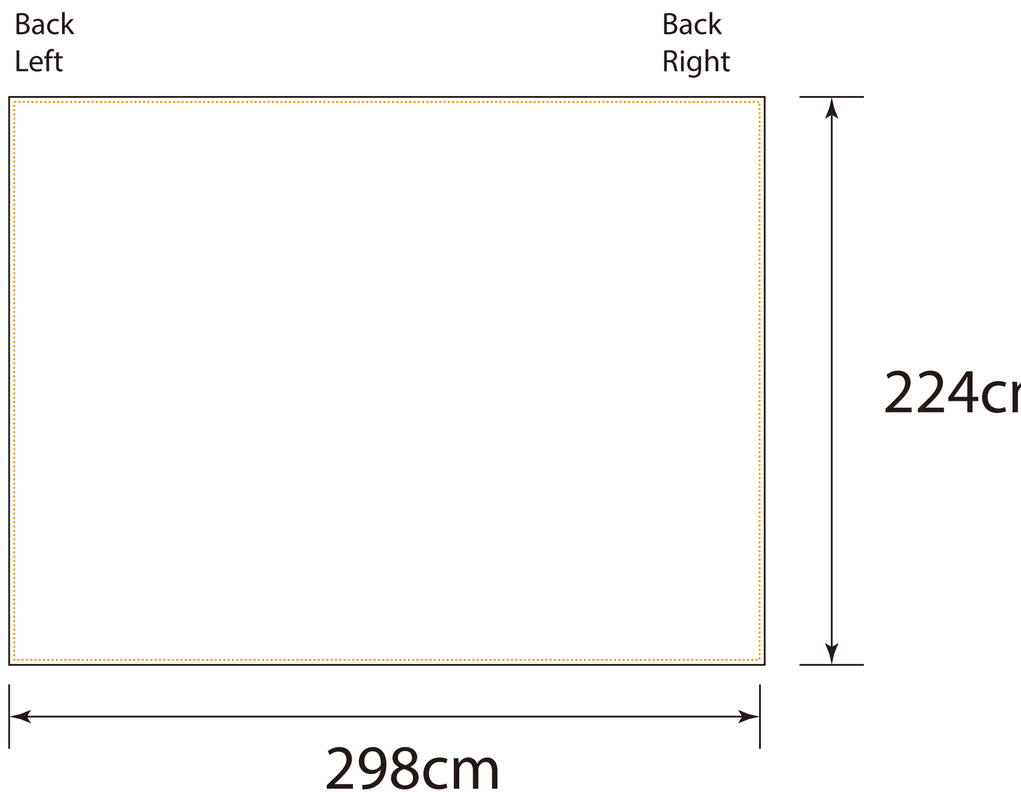
Back
Left
Back
Right
224cm
298cm