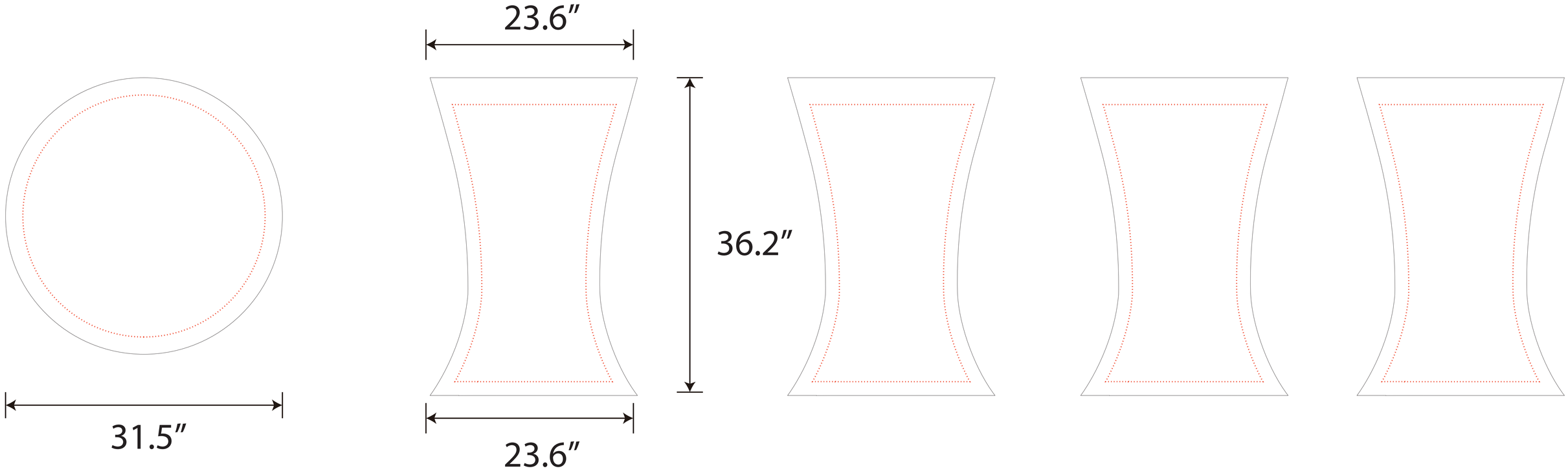32"x43"