240g

81x74-M

81x74+52x56cm
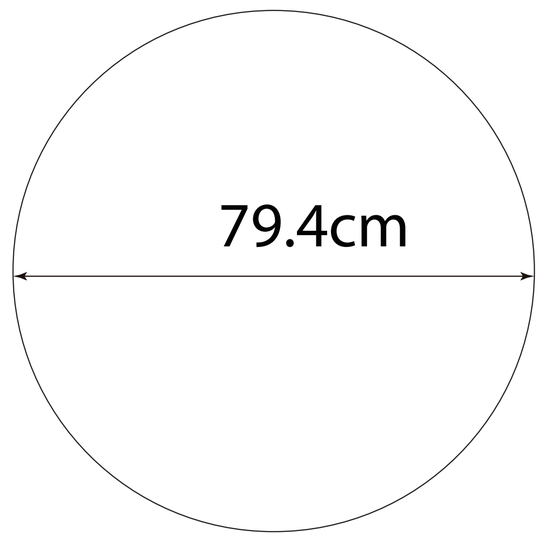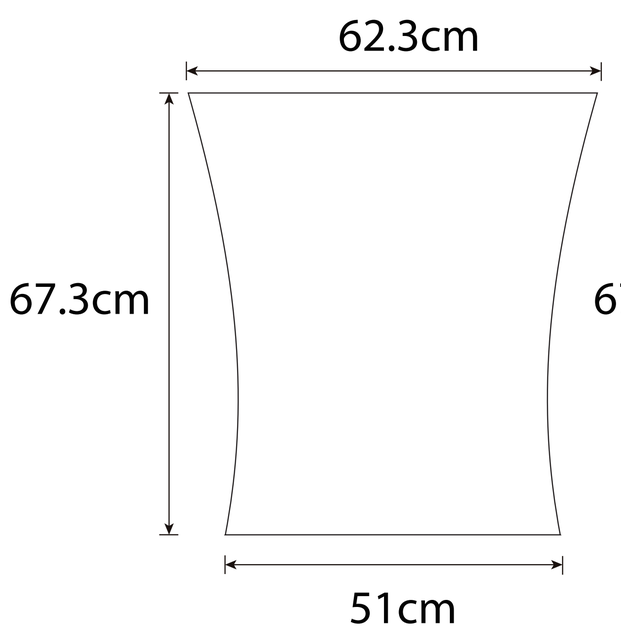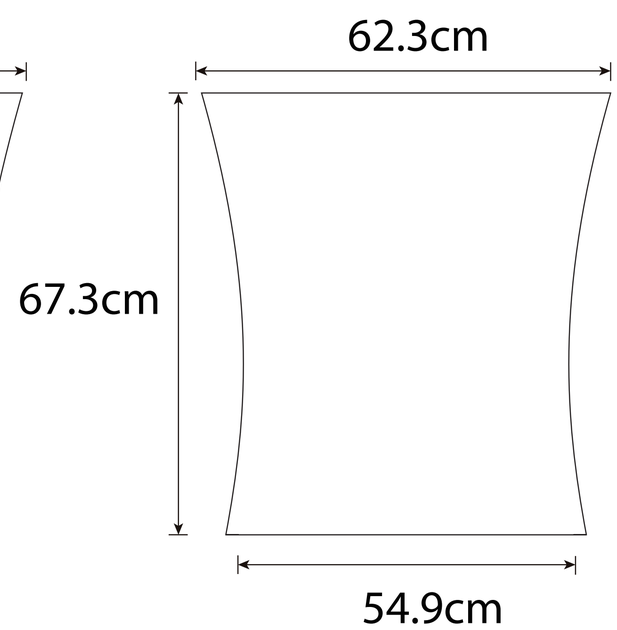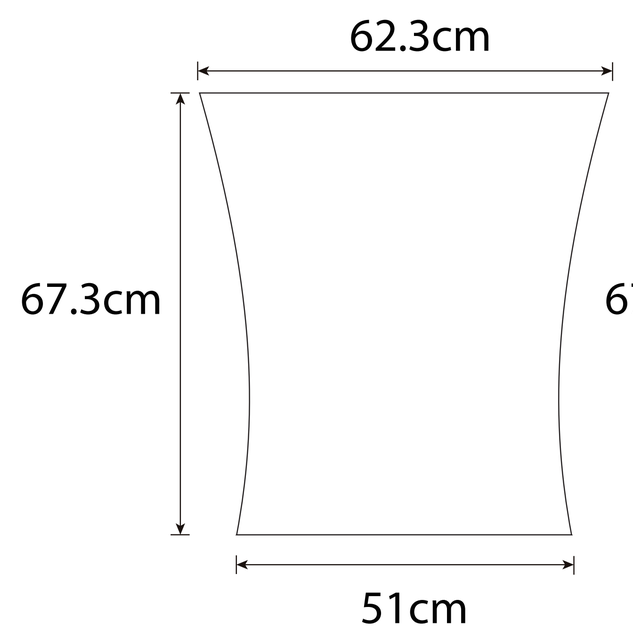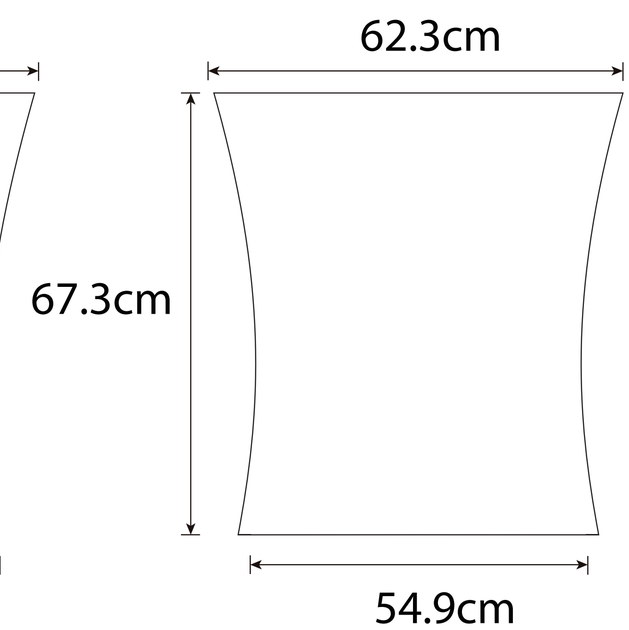
M: 31.26"*31.26"+(24.53"*26.50")*4sides