1:2

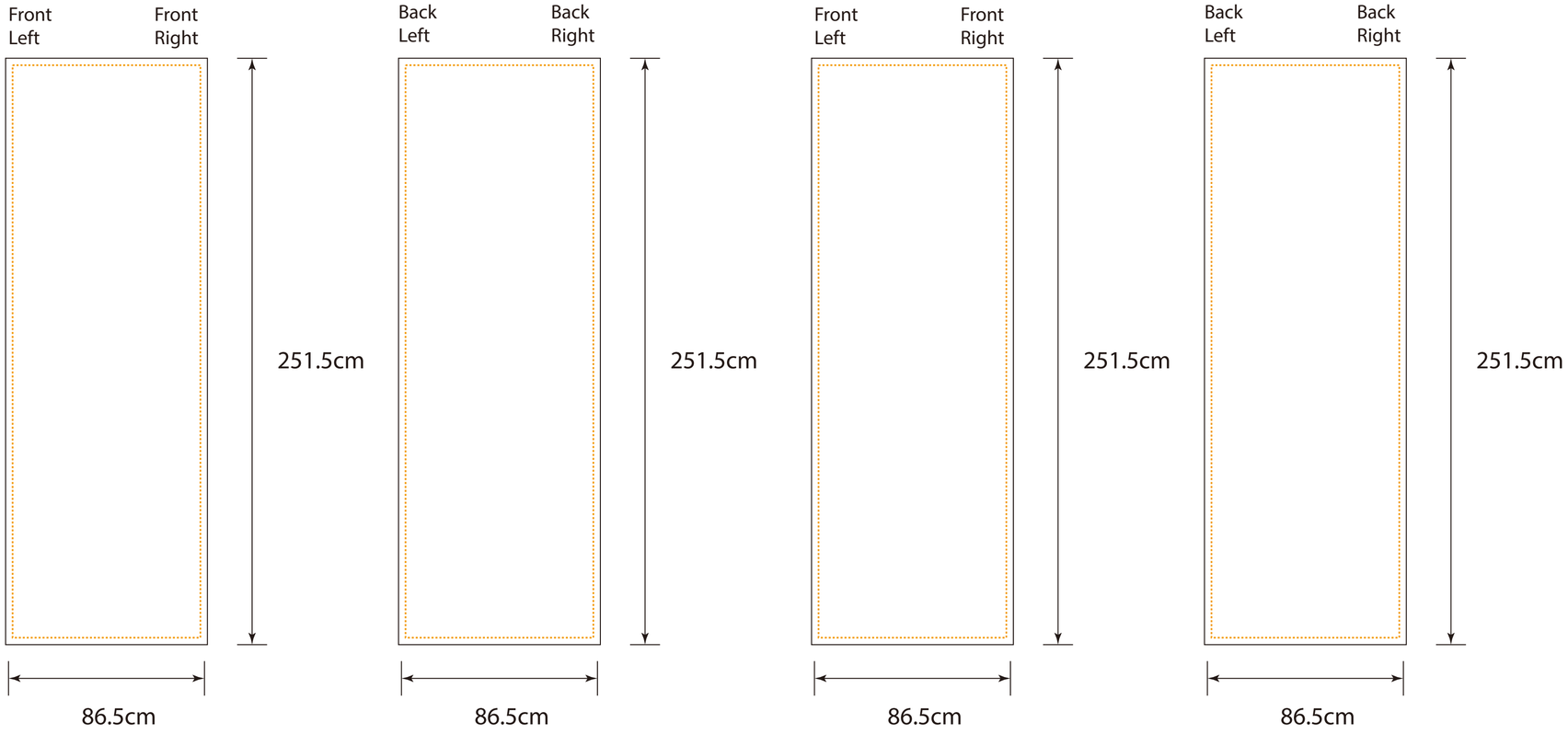
Front Left
Front Right
251.5cm
86.5cm
Back Left
Back Right
251.5cm
86.5cm
Front Left
Front Right
251.5cm
86.5cm
Back Left
Back Right
251.5cm
86.5cm

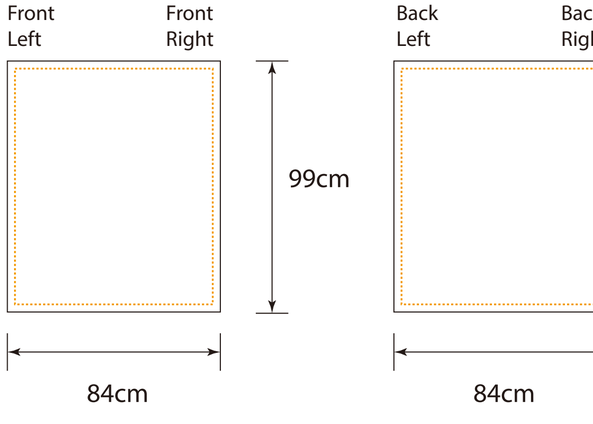
Front Left
Front Right
99cm
84cm
Back Left
84cm

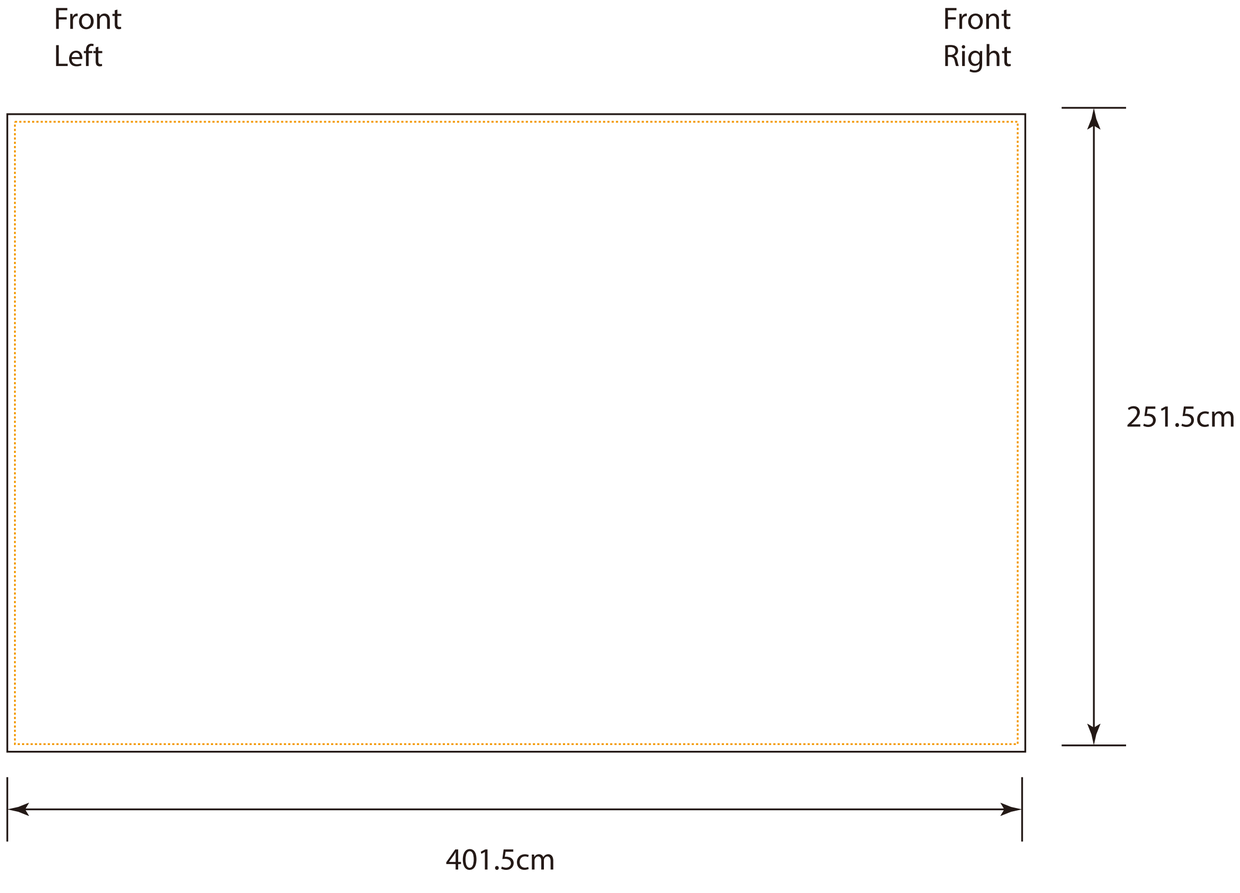
Front Left
Front Right
251.5cm
401.5cm

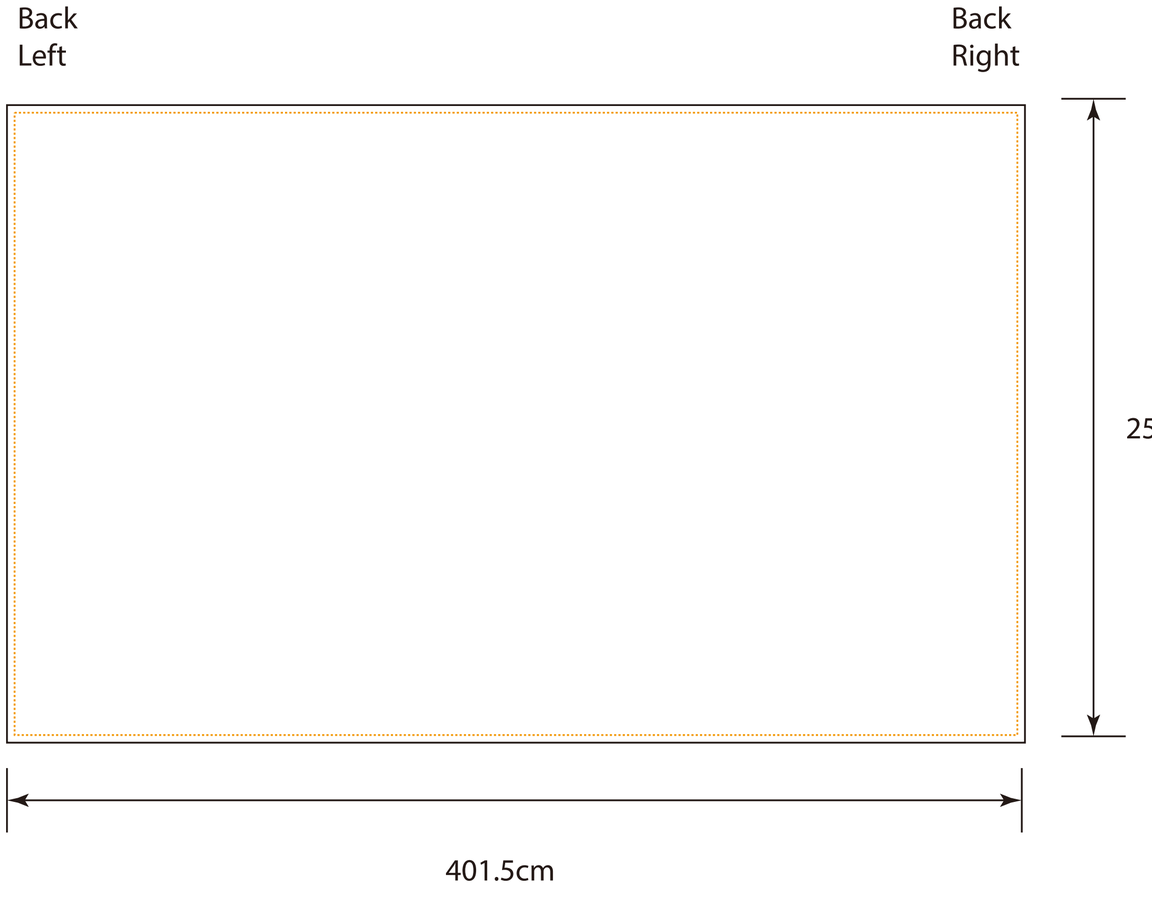
Back Left
Back Right
401.5cm