1:2

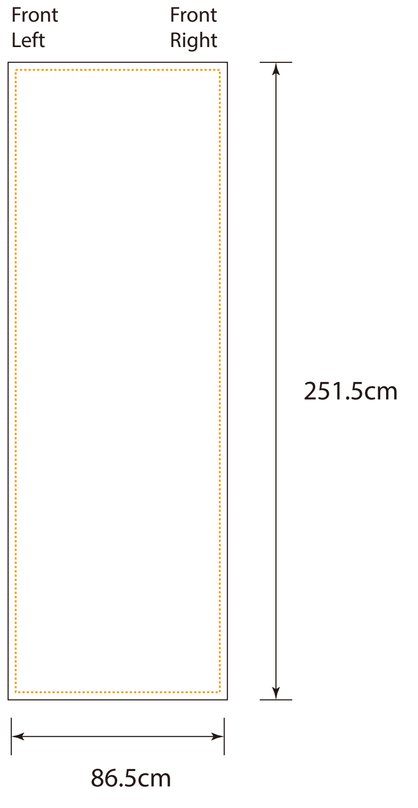
Front
Left
Front
Right
251.5cm
86.5cm

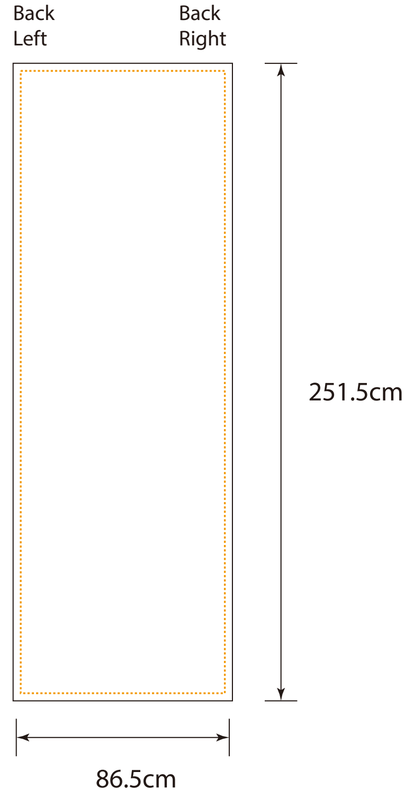
Back
Left
Back
Right
251.5cm
86.5cm

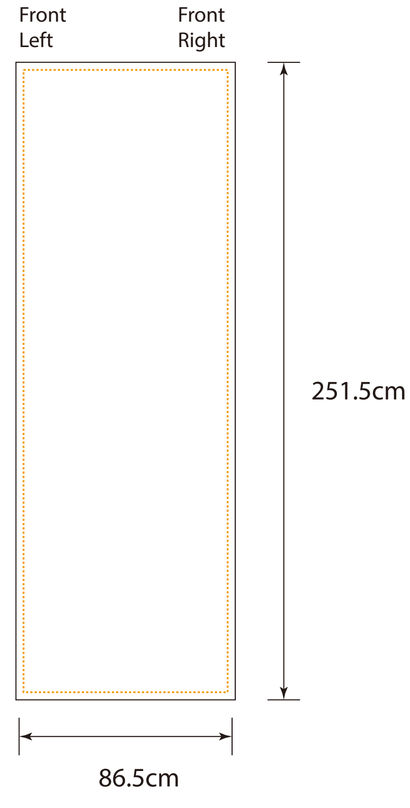
Front
Left
Front
Right
251.5cm
86.5cm

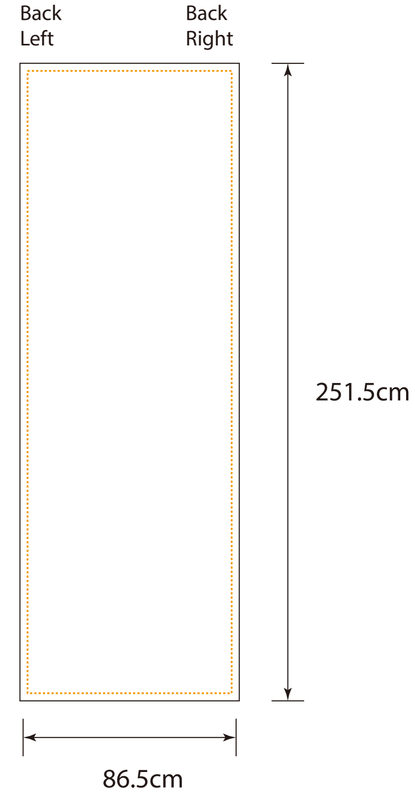
Back
Left
Back
Right
251.5cm
86.5cm

Business
Conference
W
BRAND

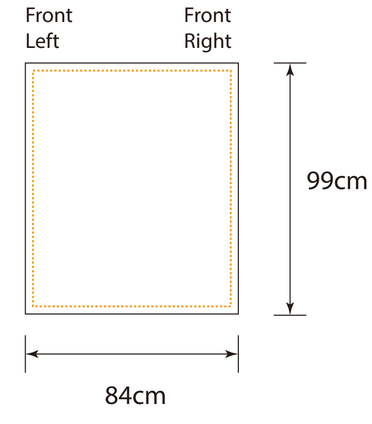
Front
Left
Front
Right
99cm
84cm

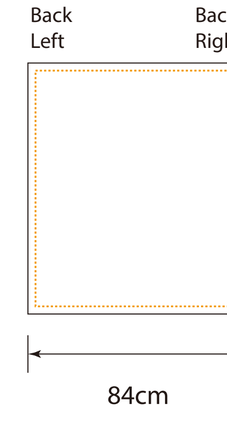
Back
Left
84cm

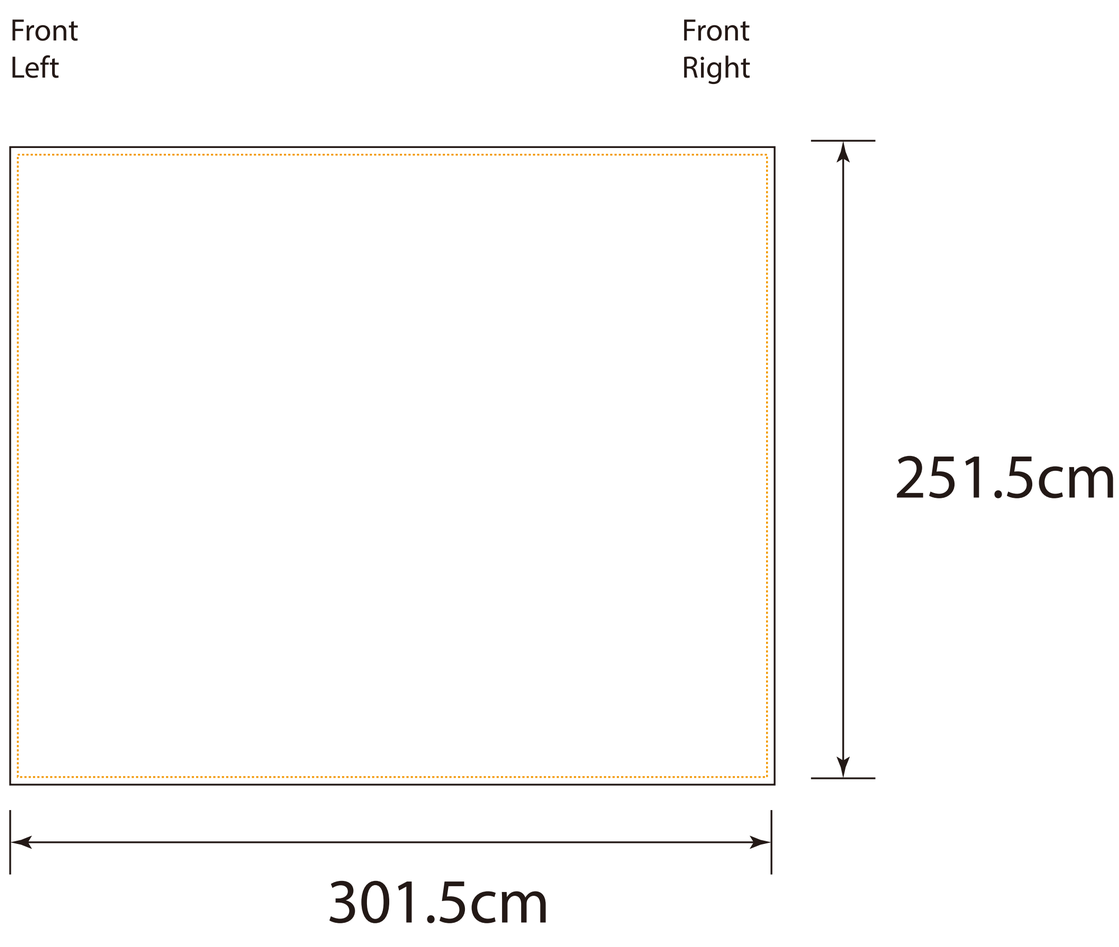
Front
Left
Front
Right
251.5cm
301.5cm

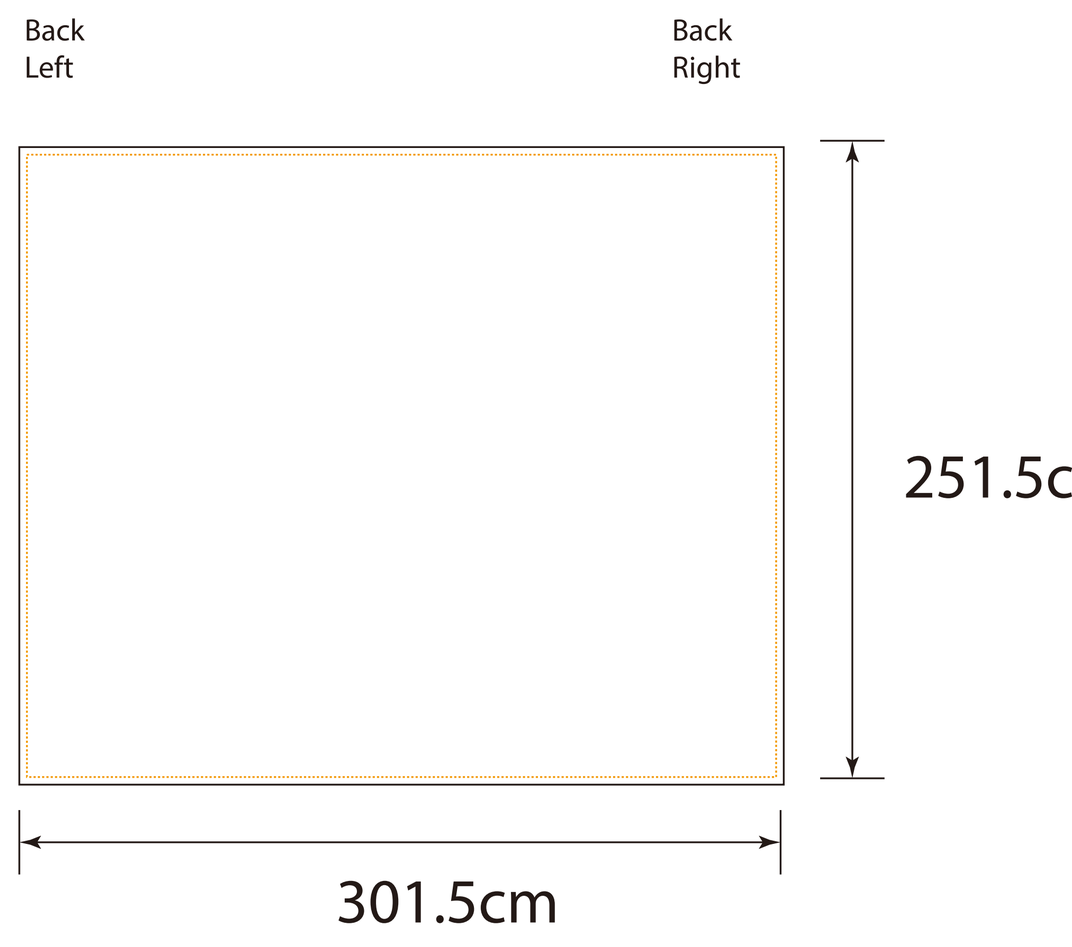
Back
Left
Back
Right
251.5c
301.5cm