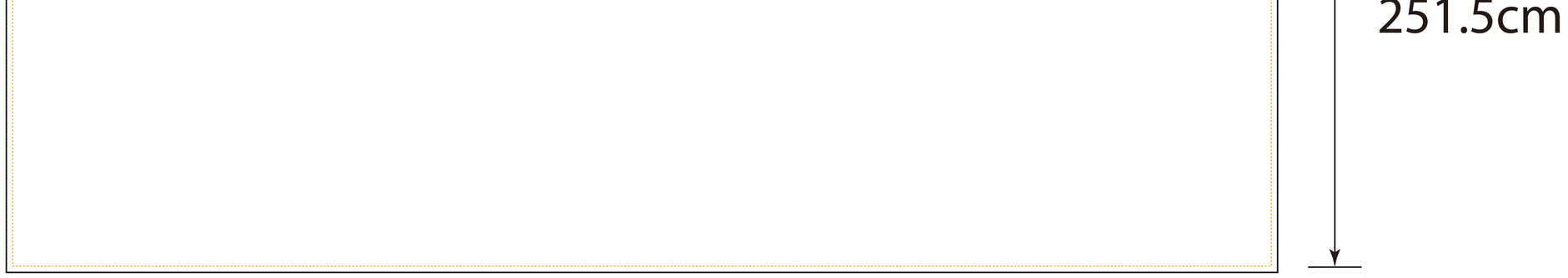
251.5cm

W
BRAND
Business
Conference
Women Week
Business
Conference
Women Week

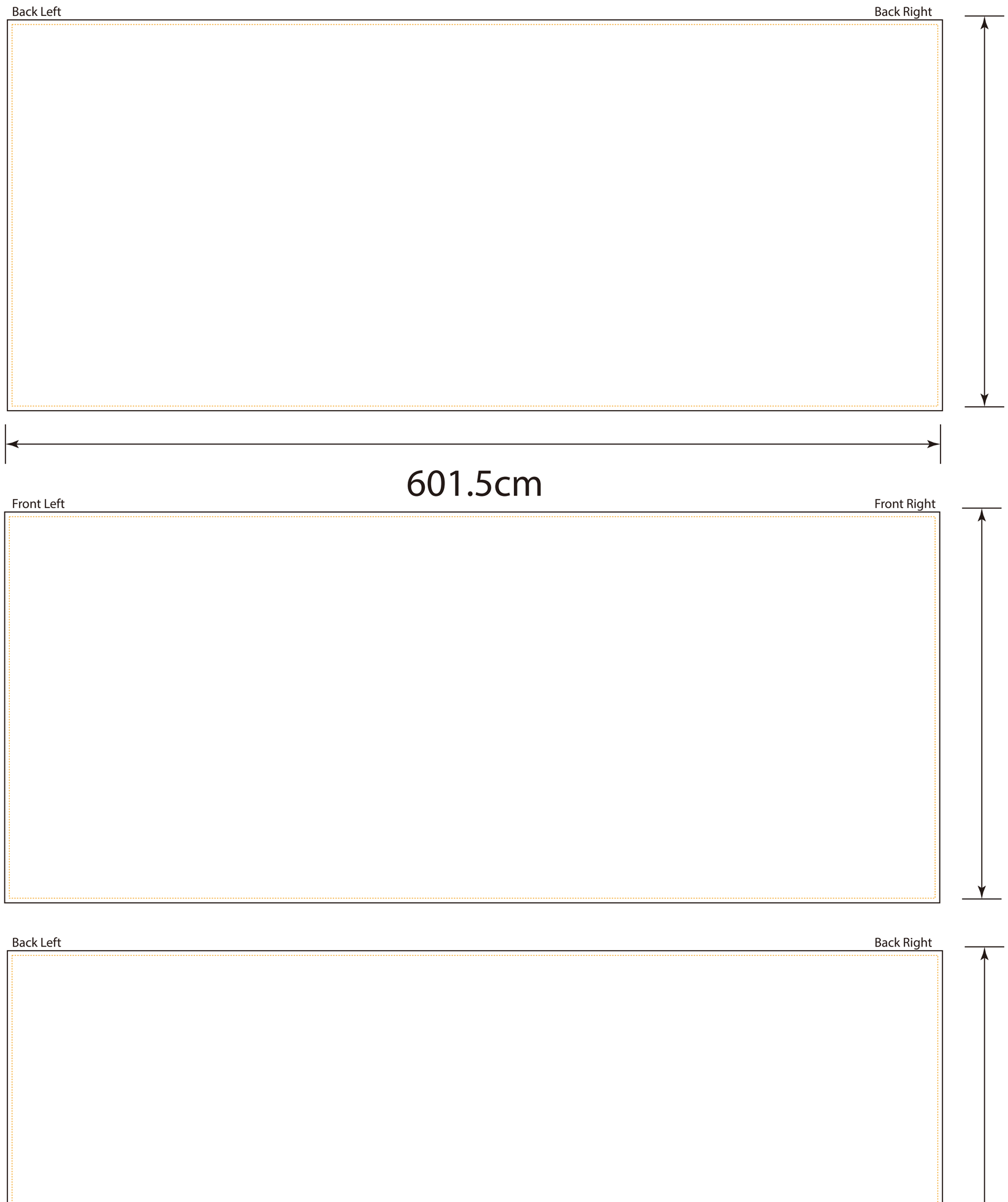
Back Left
Back Right
251.5cm
601.5cm

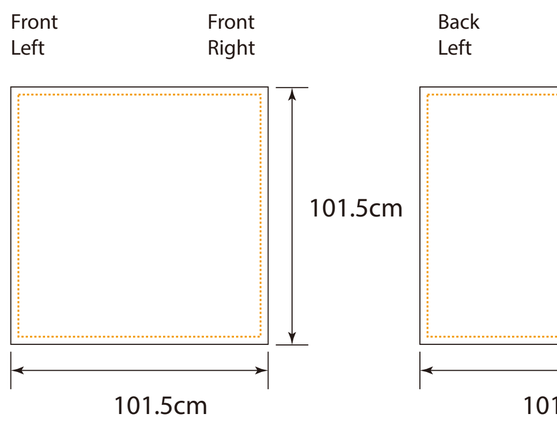
Front
Left
Front
Right
Back
Left
101.5cm
101.5cm

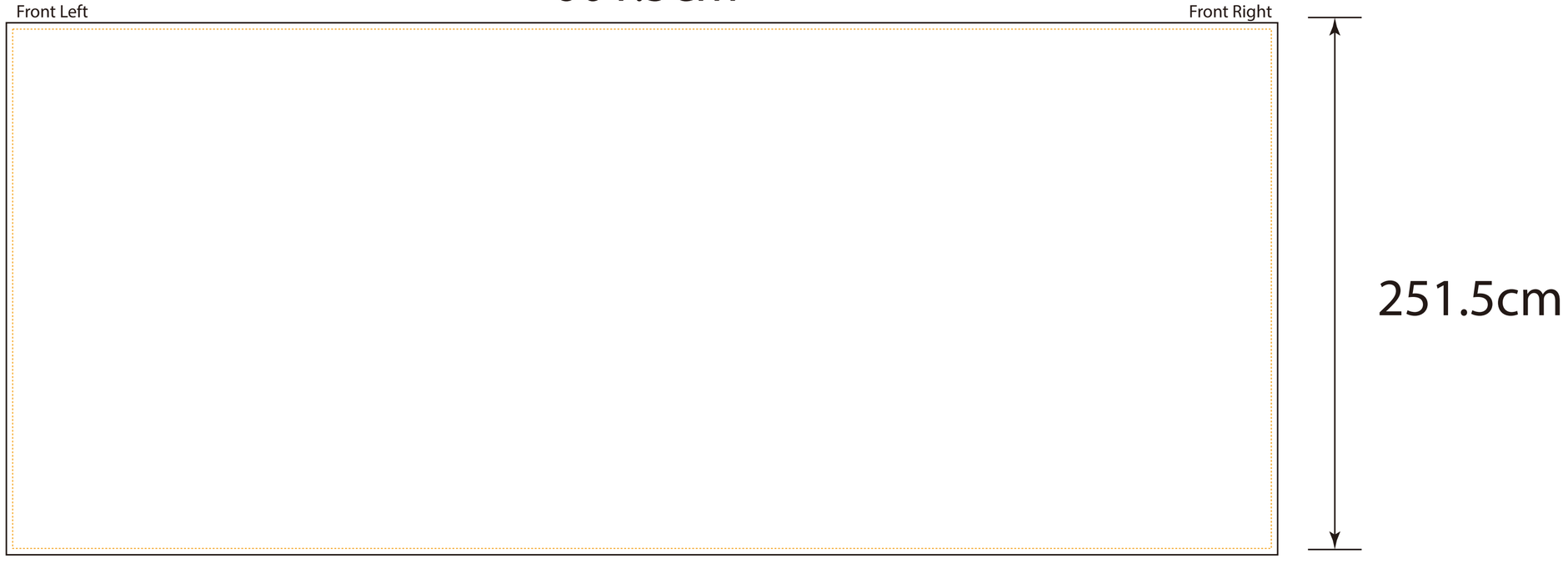
Front Left
Front Right
251.5cm

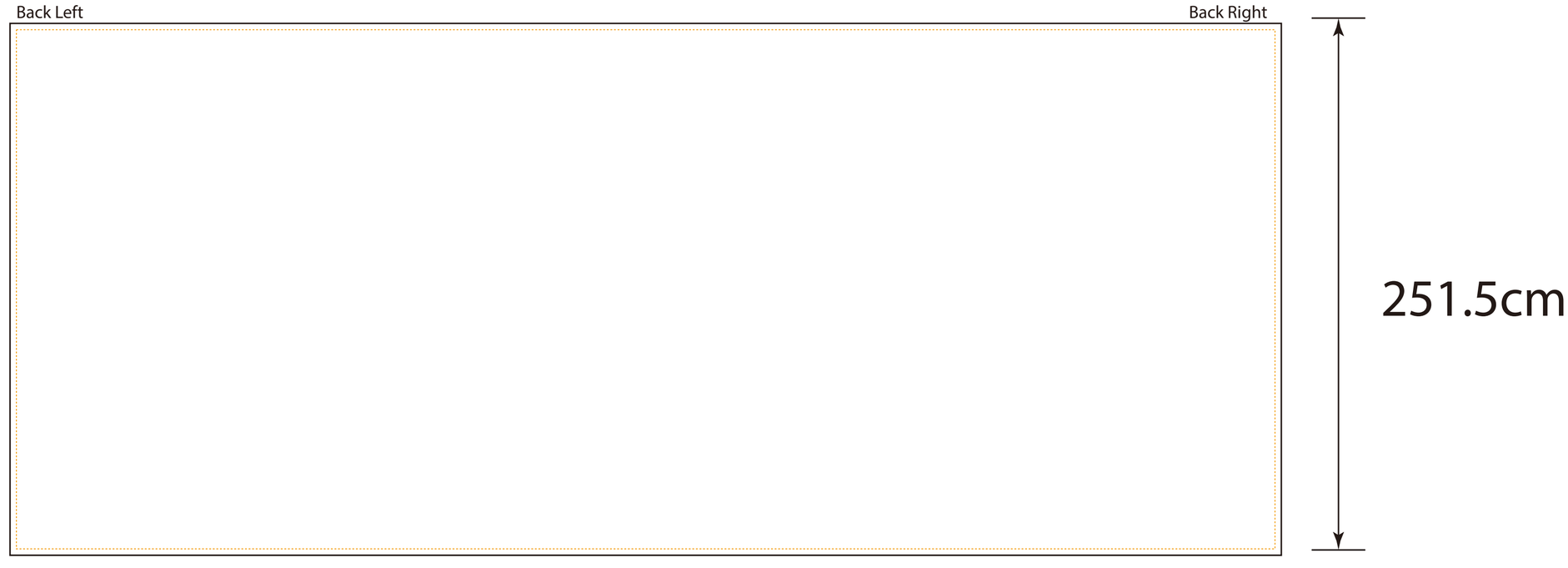
Back Left
Back Right
251.5cm