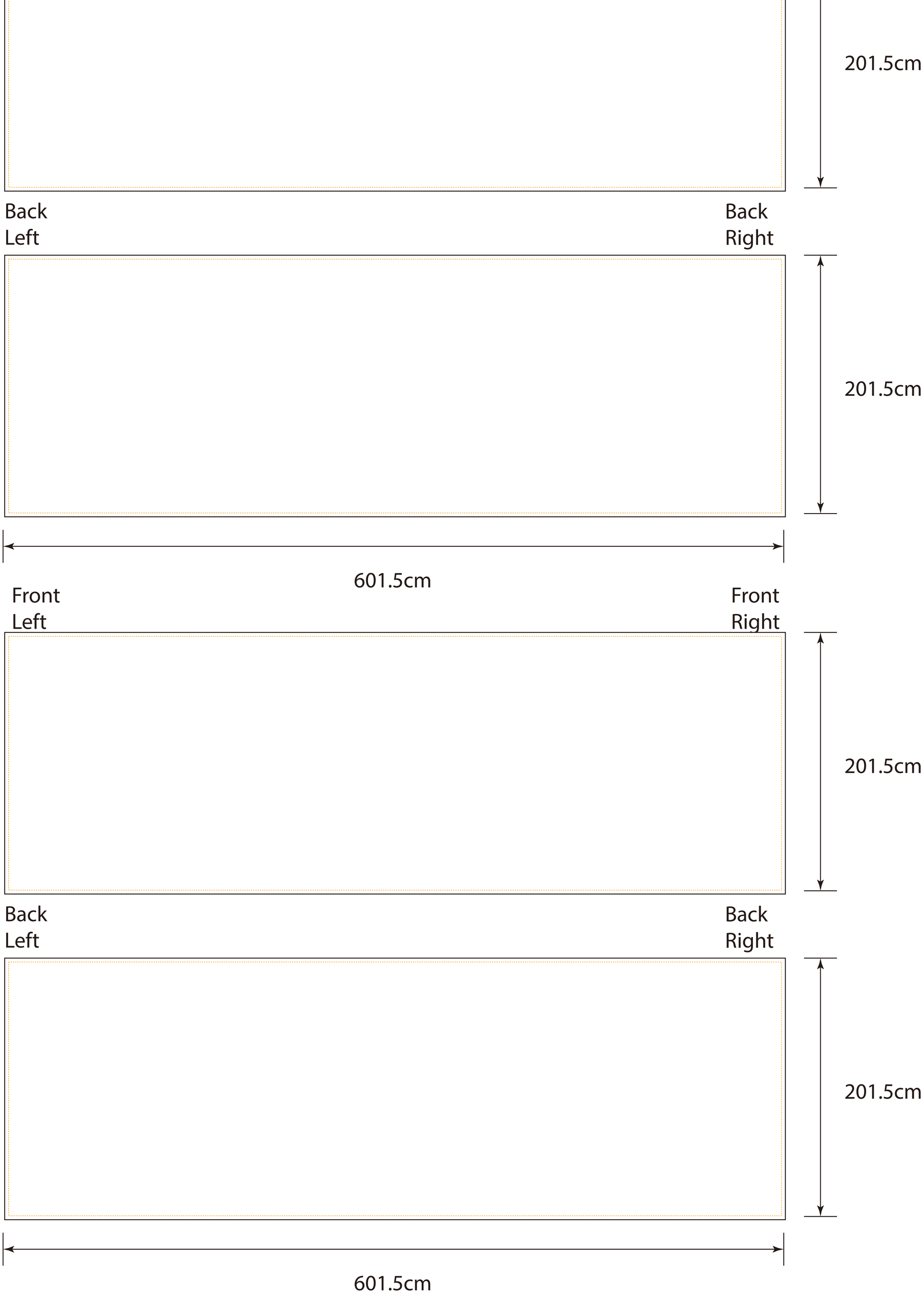
201.5cm
Back
Left
Back
Right
201.5cm
601.5cm
Front
Left
Front
Right
201.5cm
Back
Left
Back
Right
201.5cm
601.5cm

W
BRAND
Business
Conference
Women Week

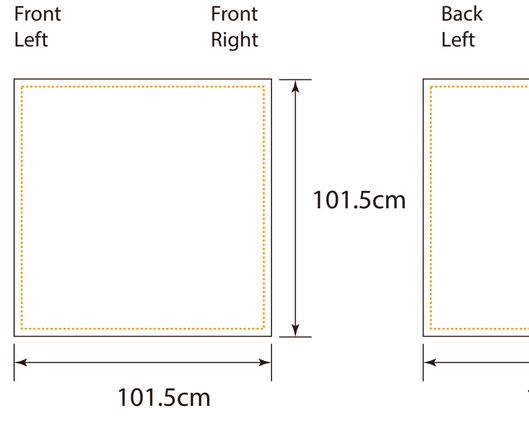
Front
Left
Front
Right
Back
Left
101.5cm
101.5cm