Business
Conference
Women Week

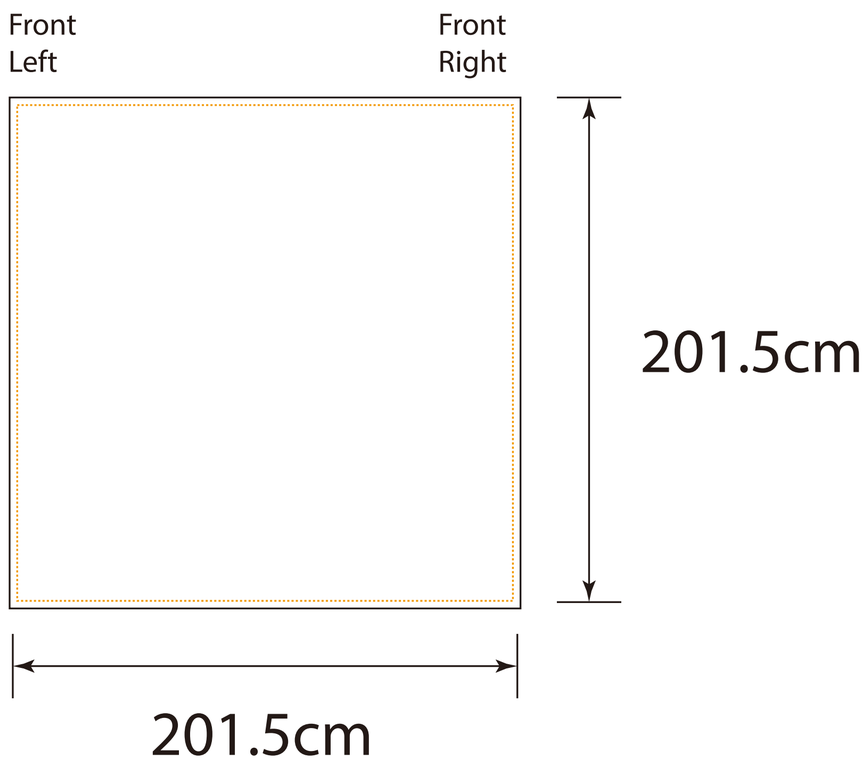
Front
Left
Front
Right
201.5cm
201.5cm

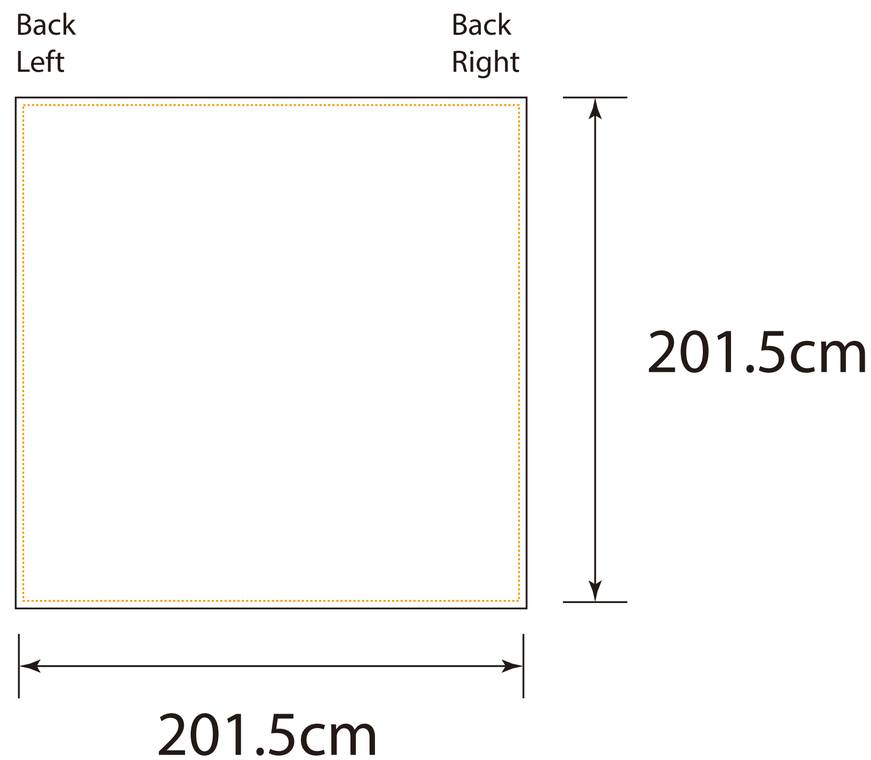
Back
Left
Back
Right
201.5cm
201.5cm

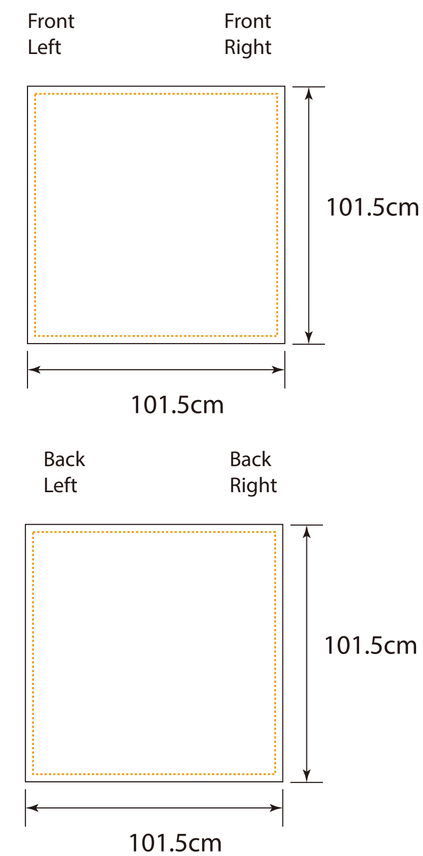
Front
Left
Front
Right
101.5cm
101.5cm
Back
Left
Back
Right
101.5cm
101.5cm

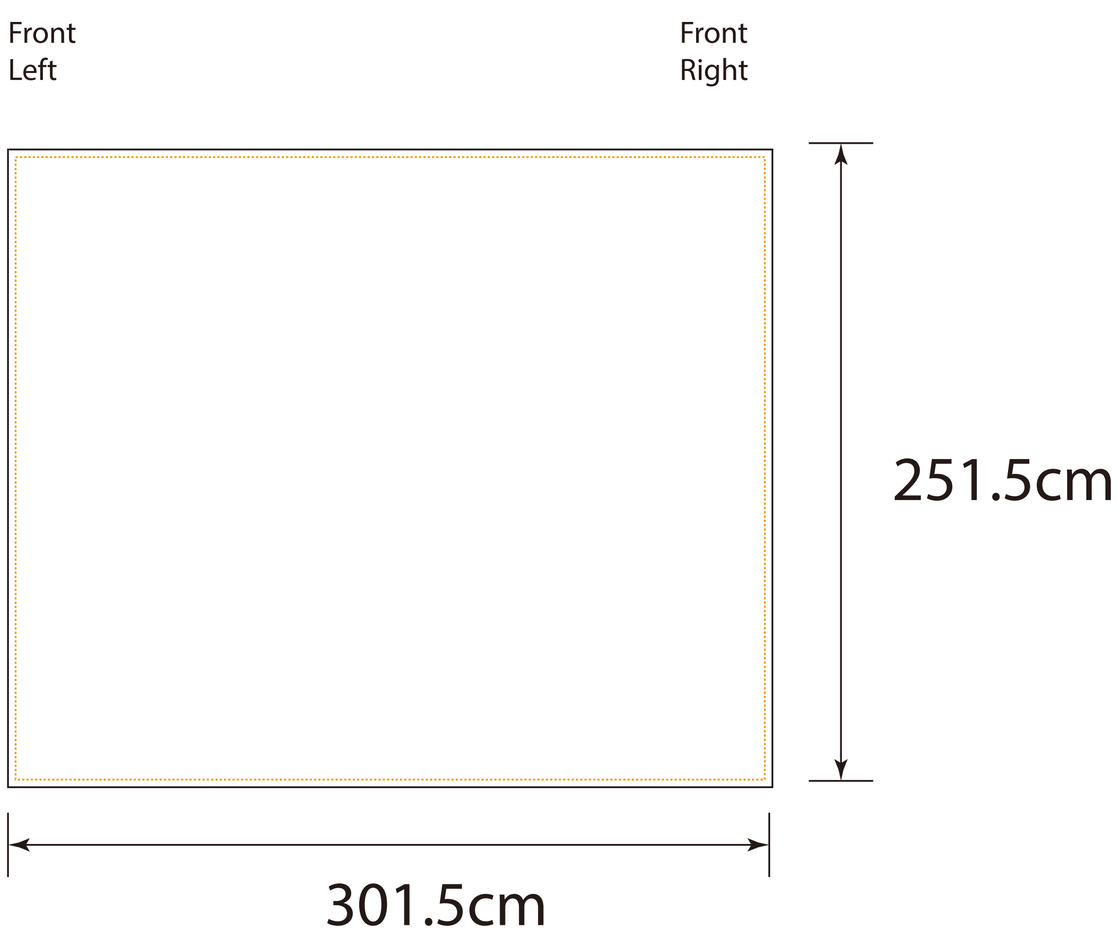
Front
Left
Front
Right
251.5cm
301.5cm

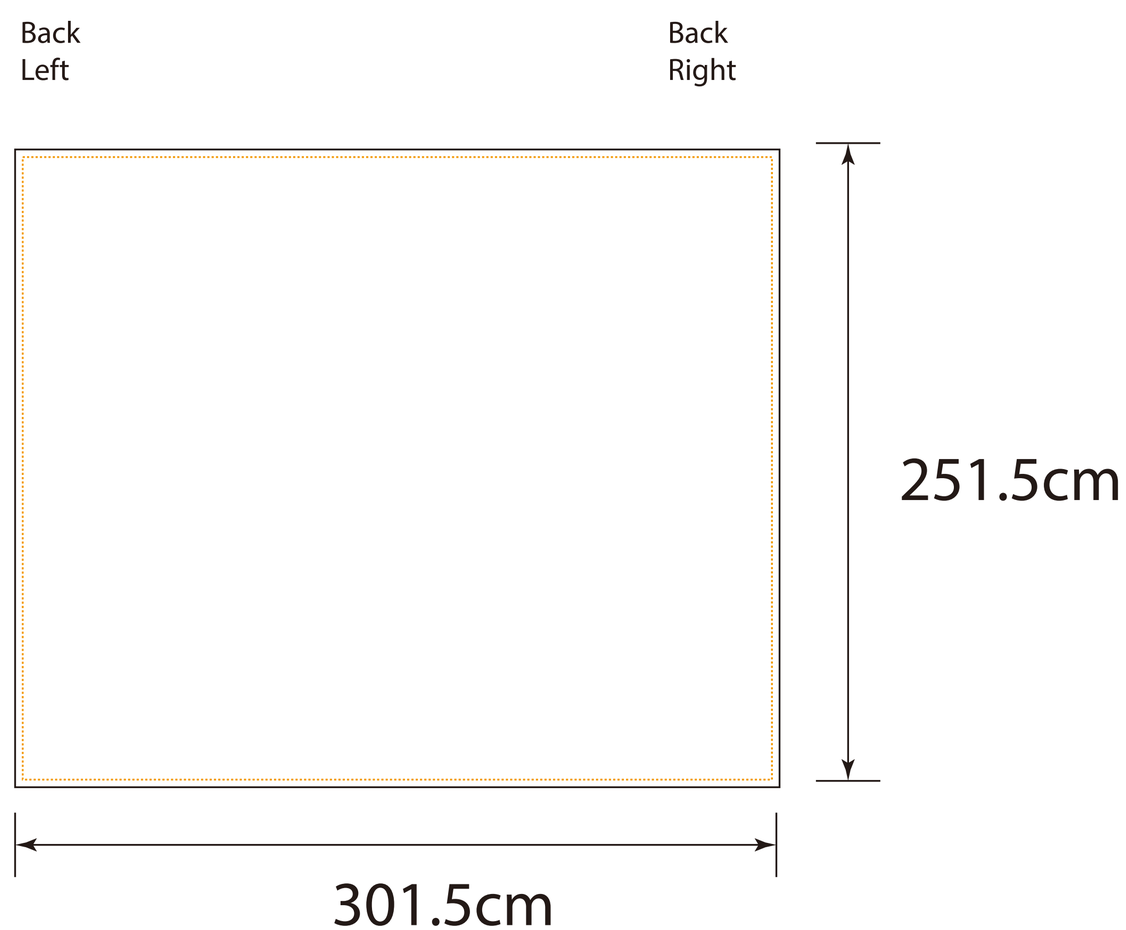
Back
Left
Back
Right
251.5cm
301.5cm