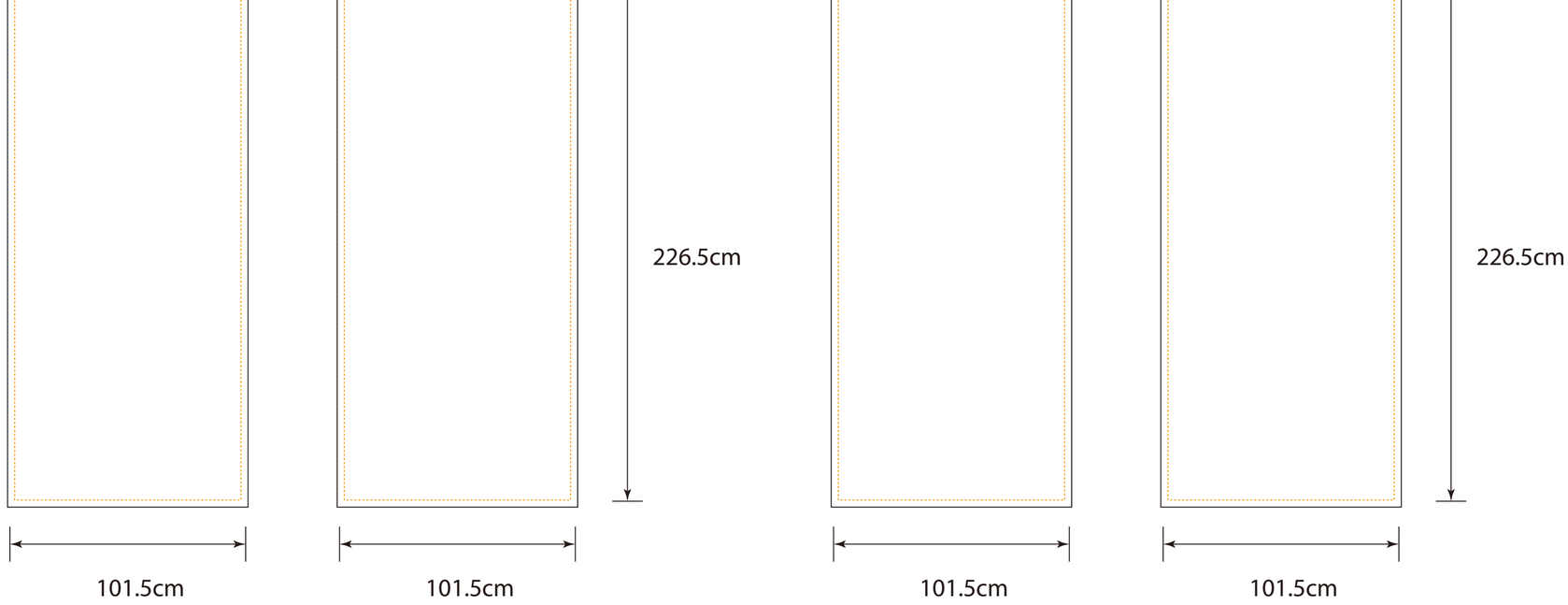
226.5cm
226.5cm
101.5cm
101.5cm
101.5cm
101.5cm

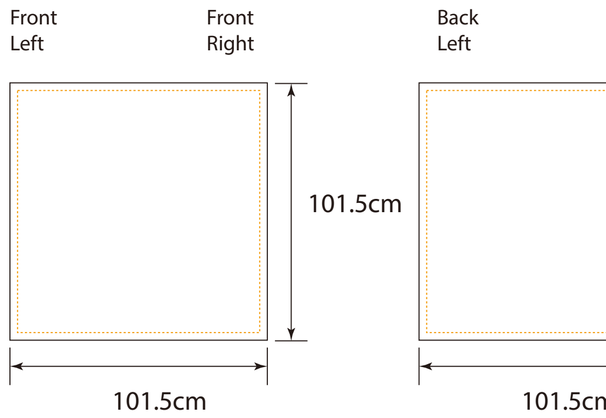
Front
Left
Front
Right
Back
Left
101.5cm
101.5cm
101.5cm

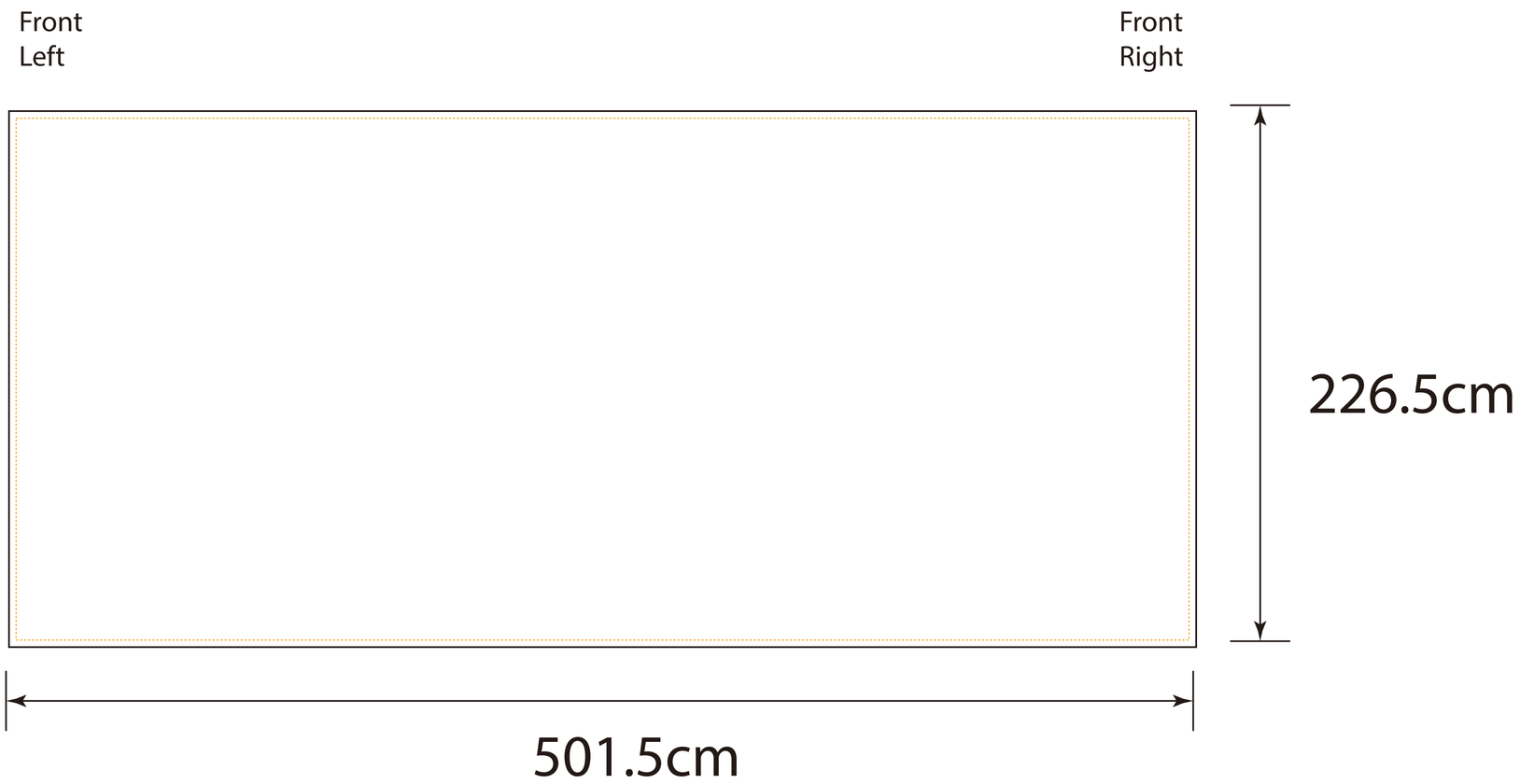
Front
Left
Front
Right
226.5cm
501.5cm

Front
Left
Front
Right
Back
Left
101.5cm
101.5cm

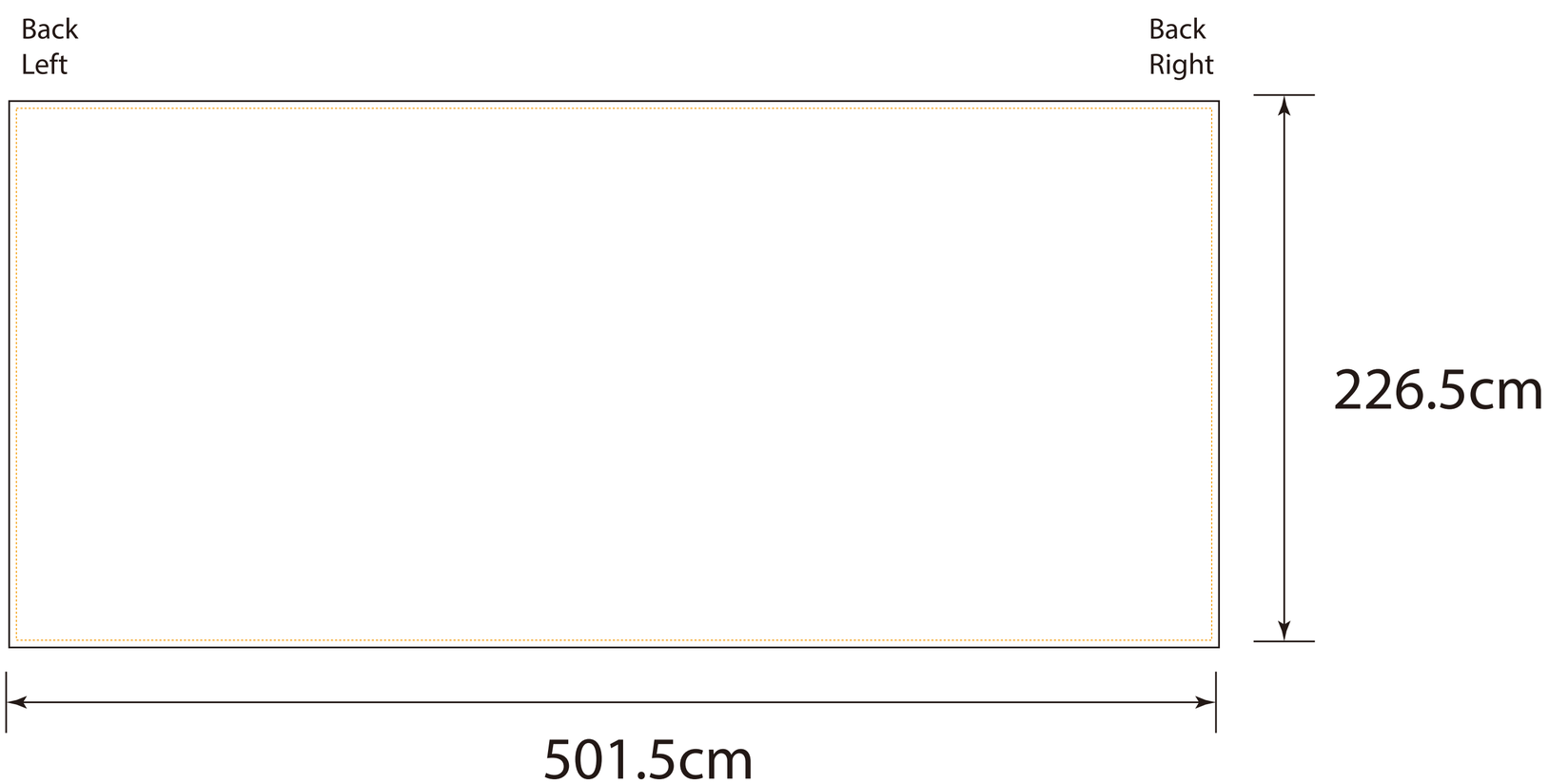
Back
Left
Back
Right
226.5cm
501.5cm

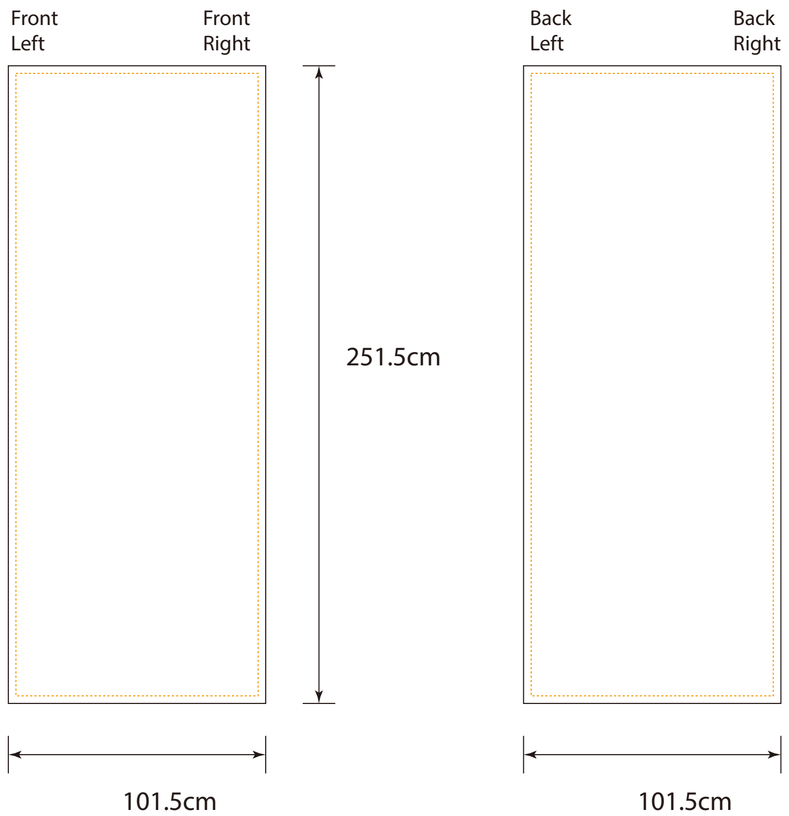
Front
Left
Front
Right
251.5cm
101.5cm
Back
Left
Back
Right
101.5cm