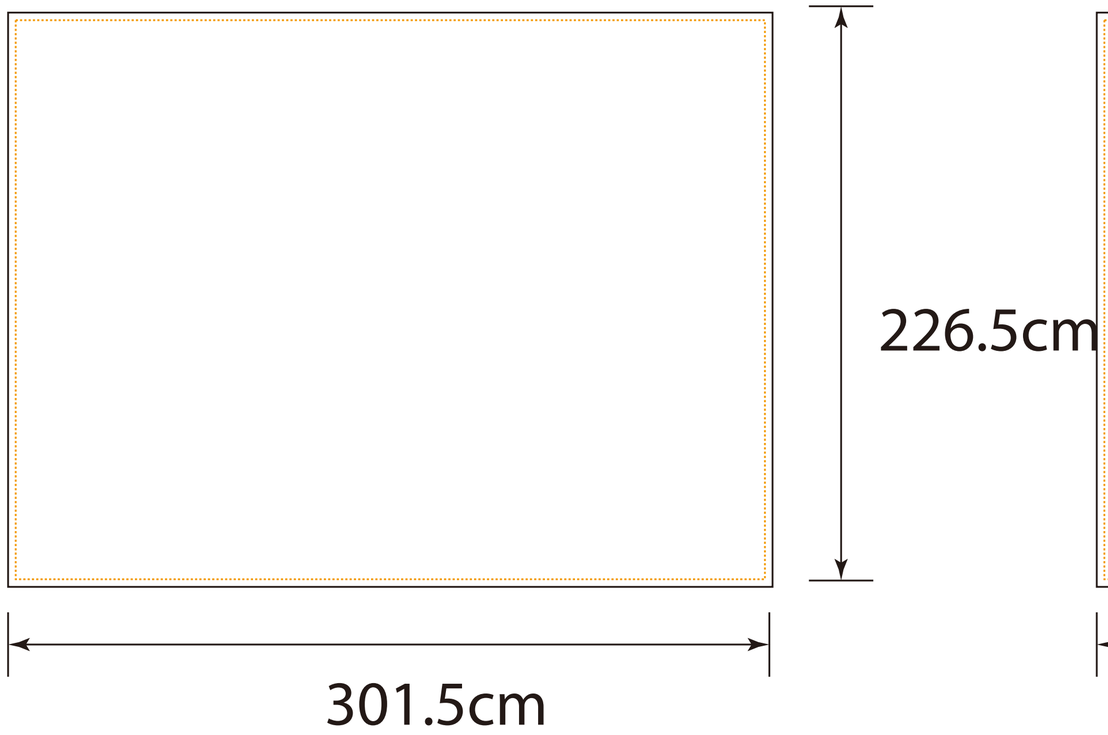

Front
Left

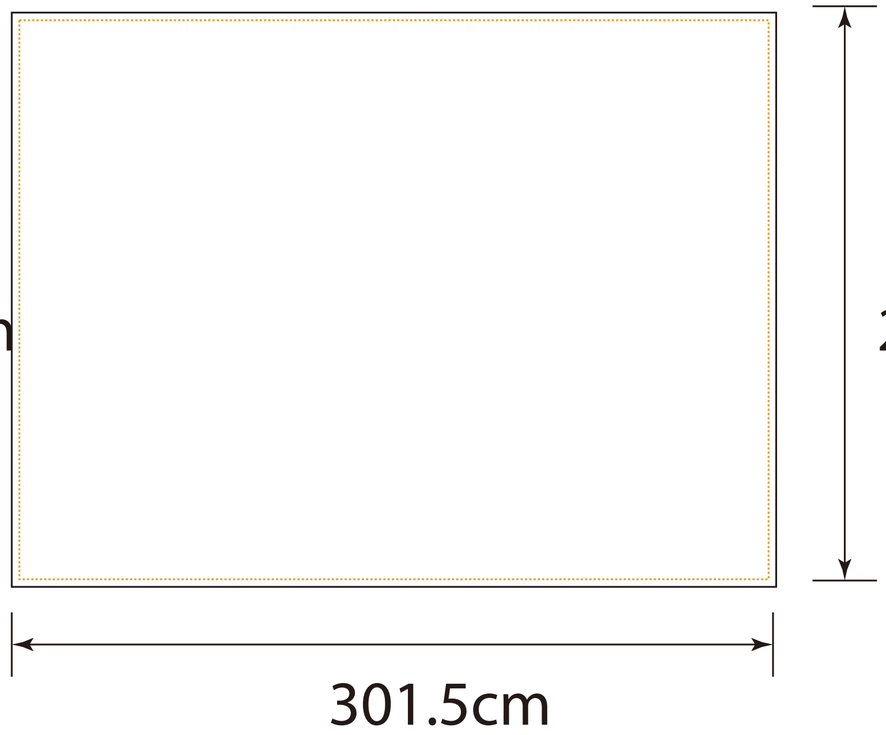

Front
Right

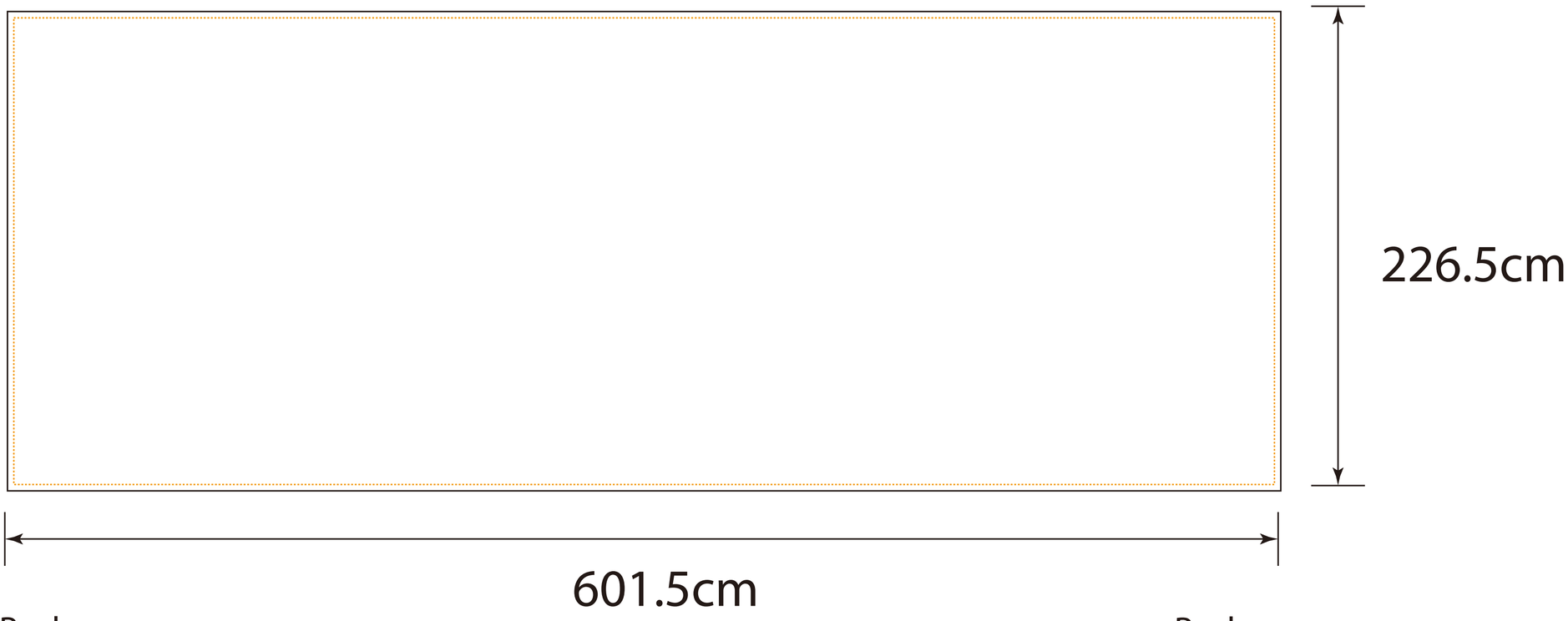

Back
Left
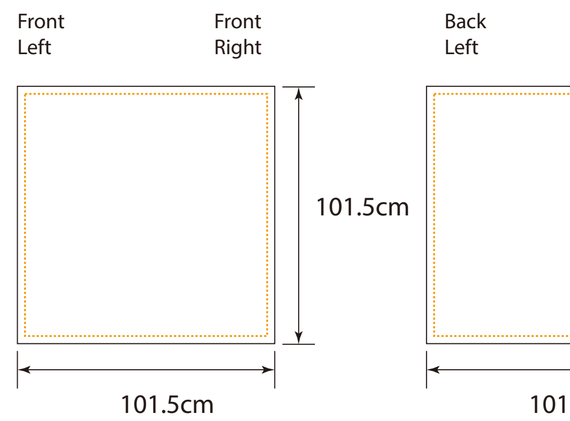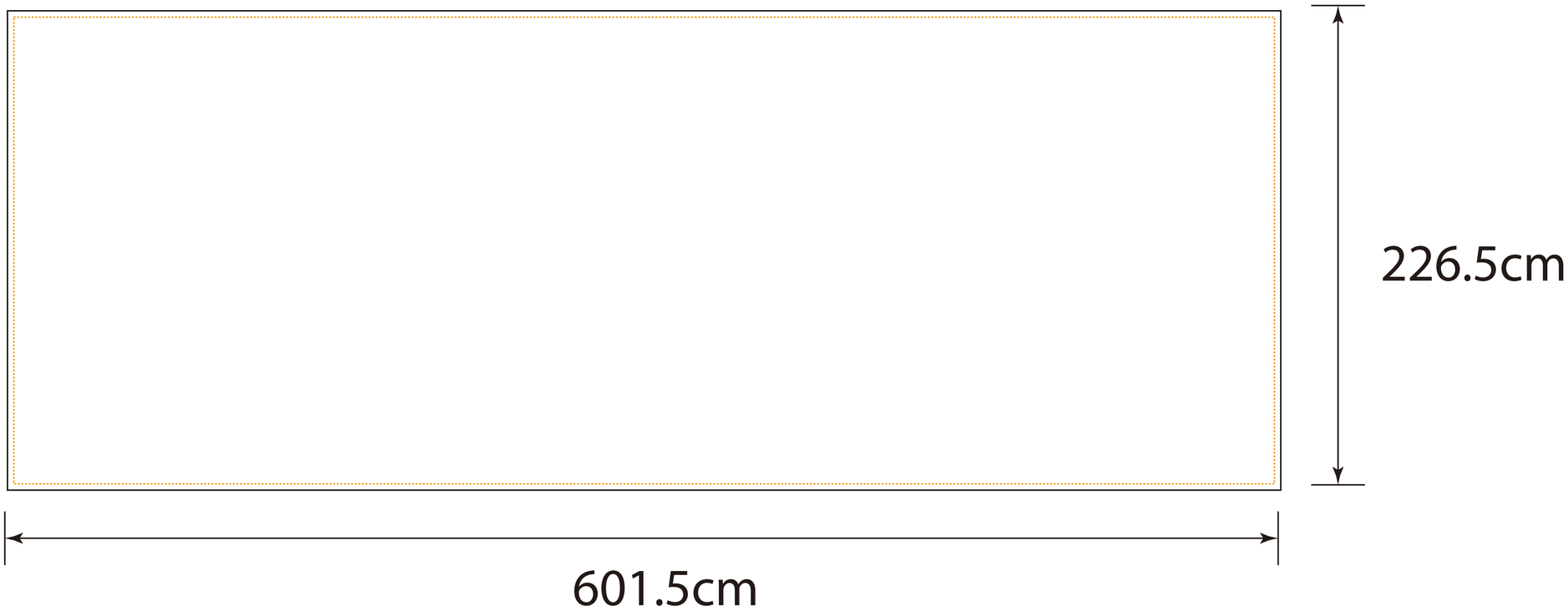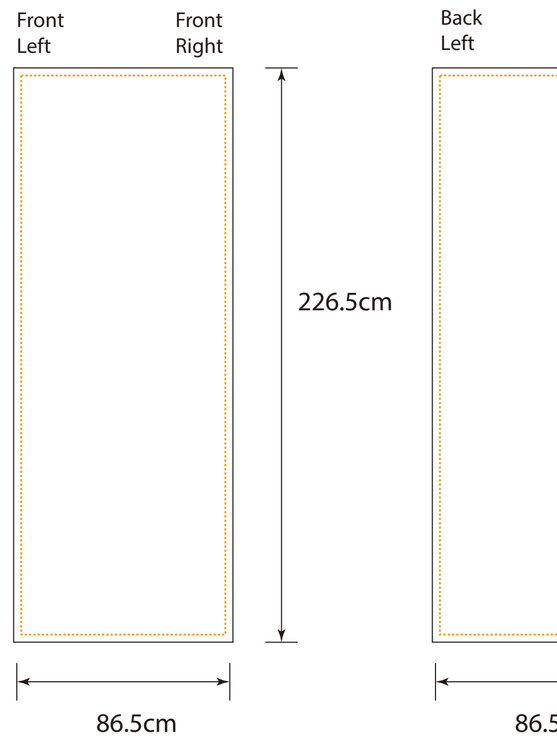
Back
Right