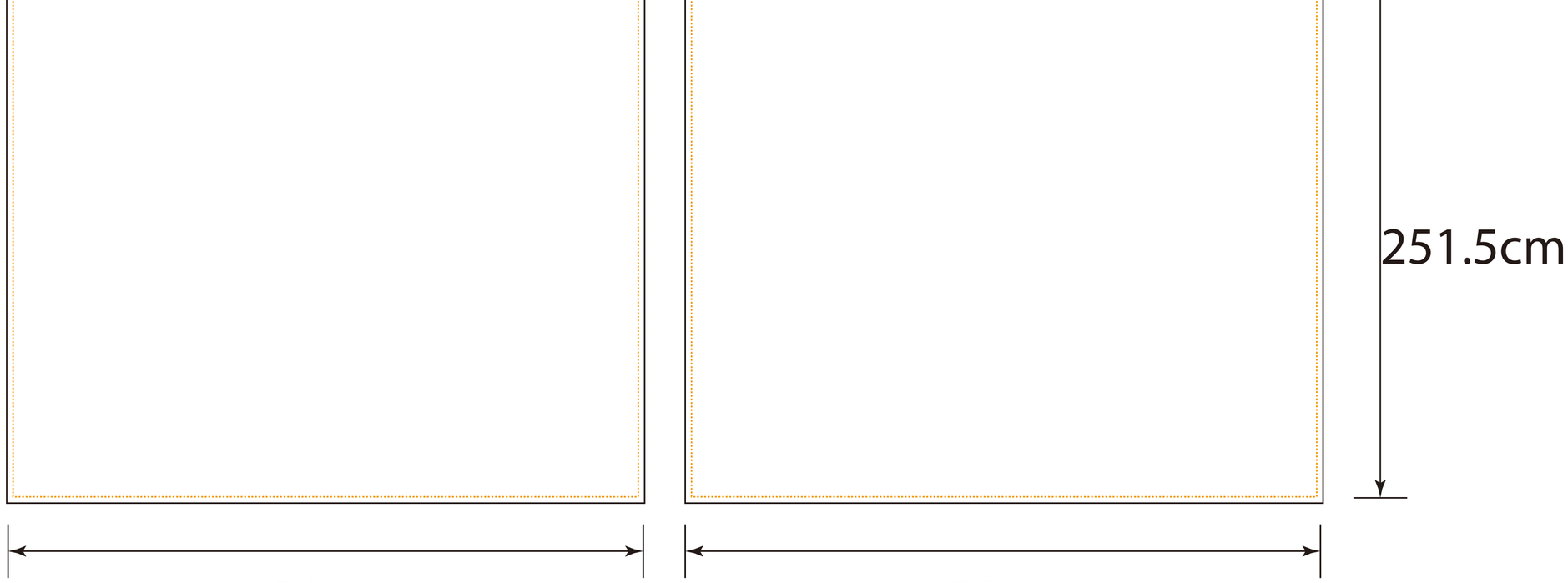

Front
Left

Front
Right

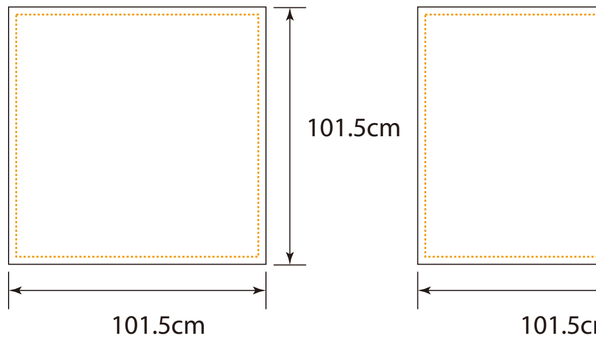

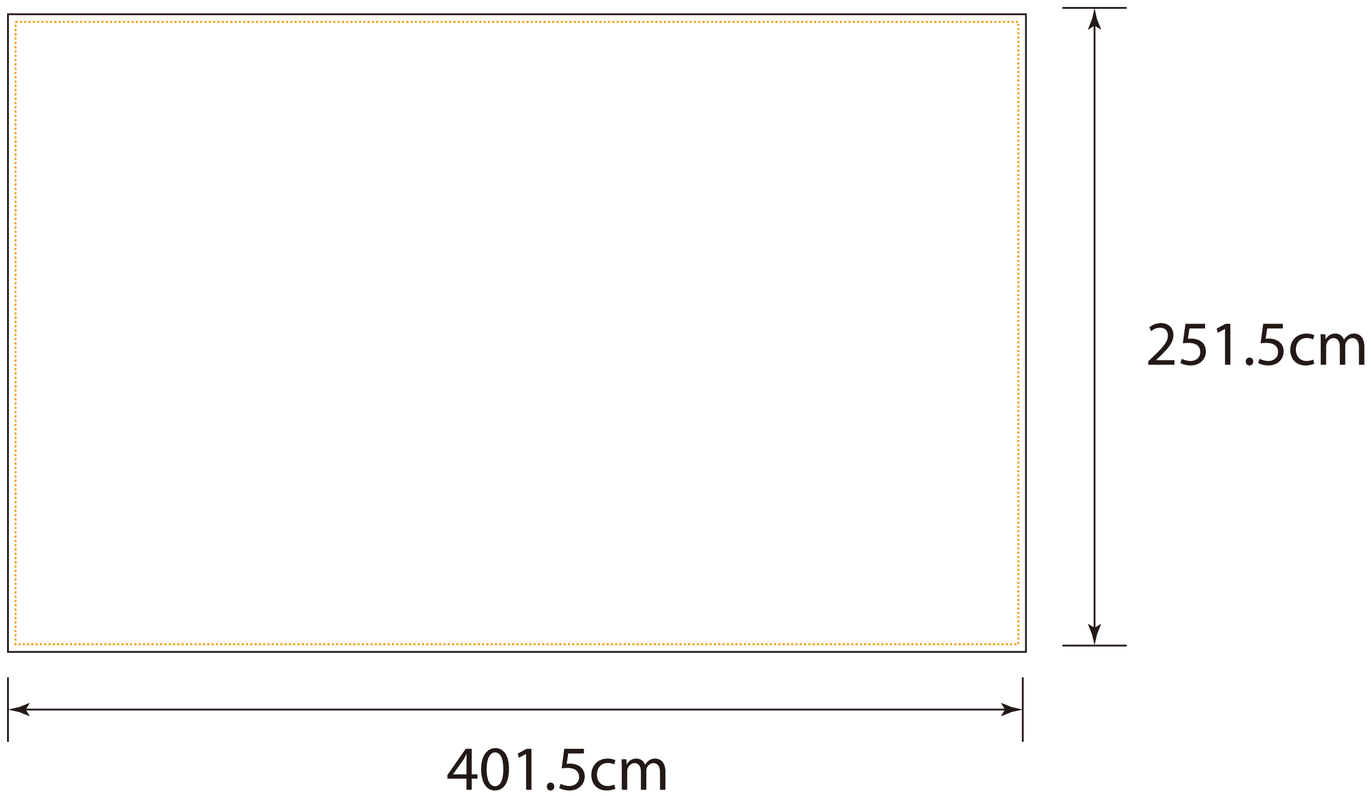

Back
Left
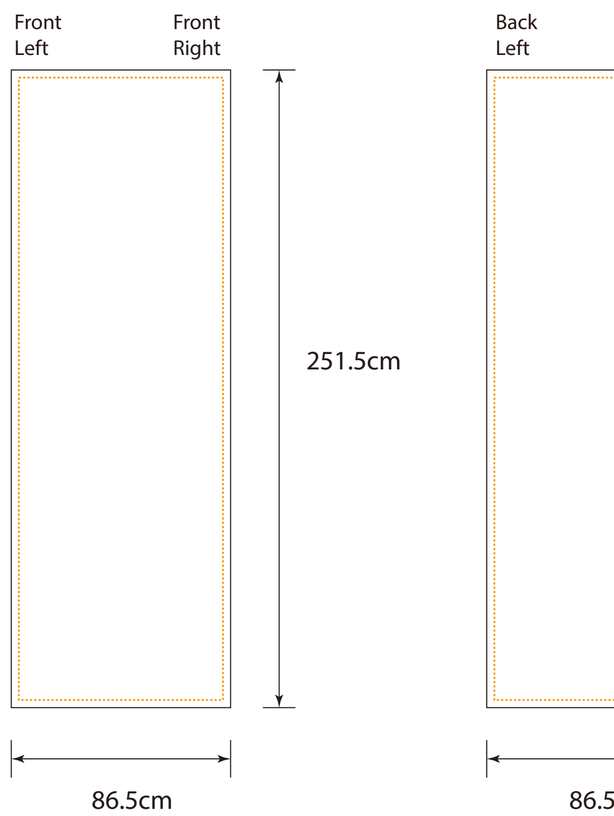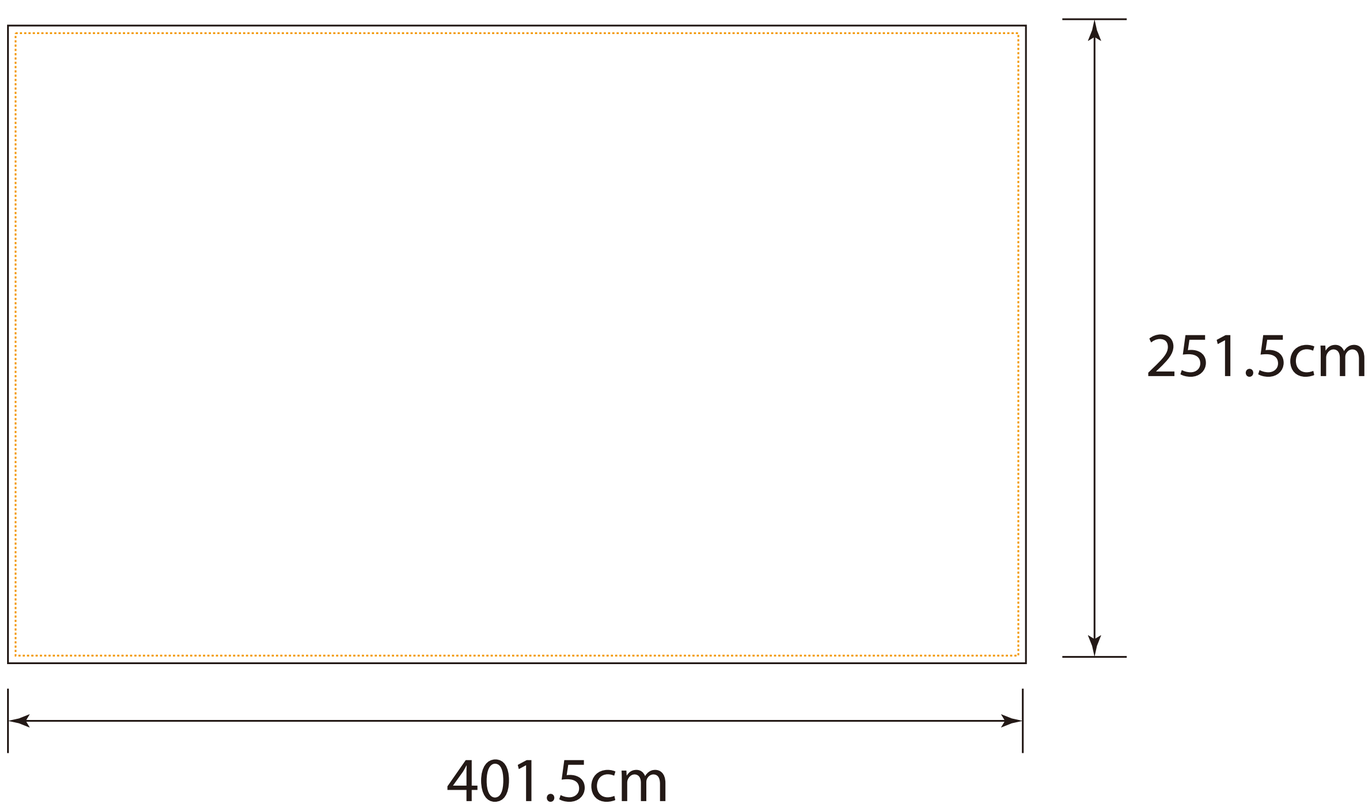
Back
Right