M
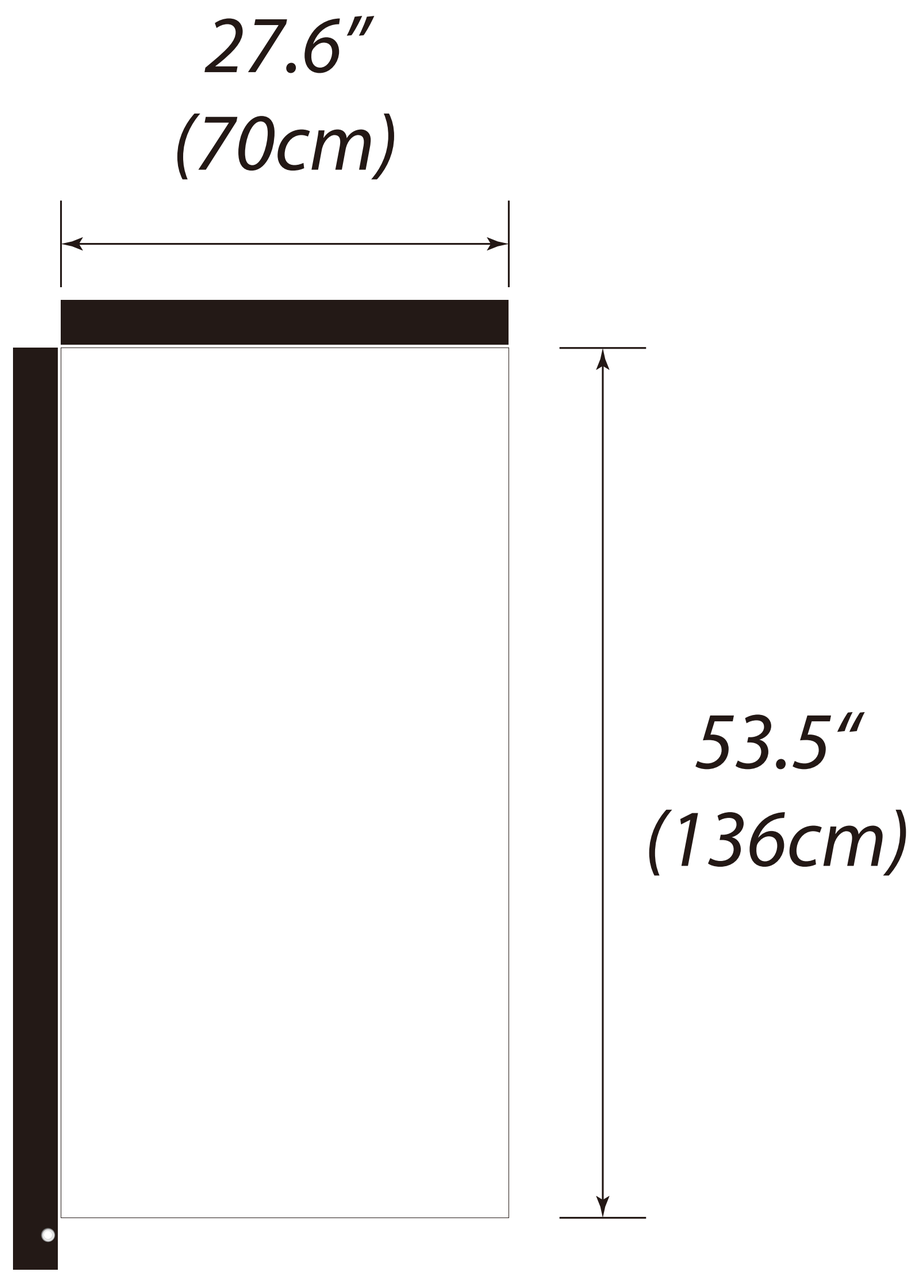
Finshed size:
136x70cm