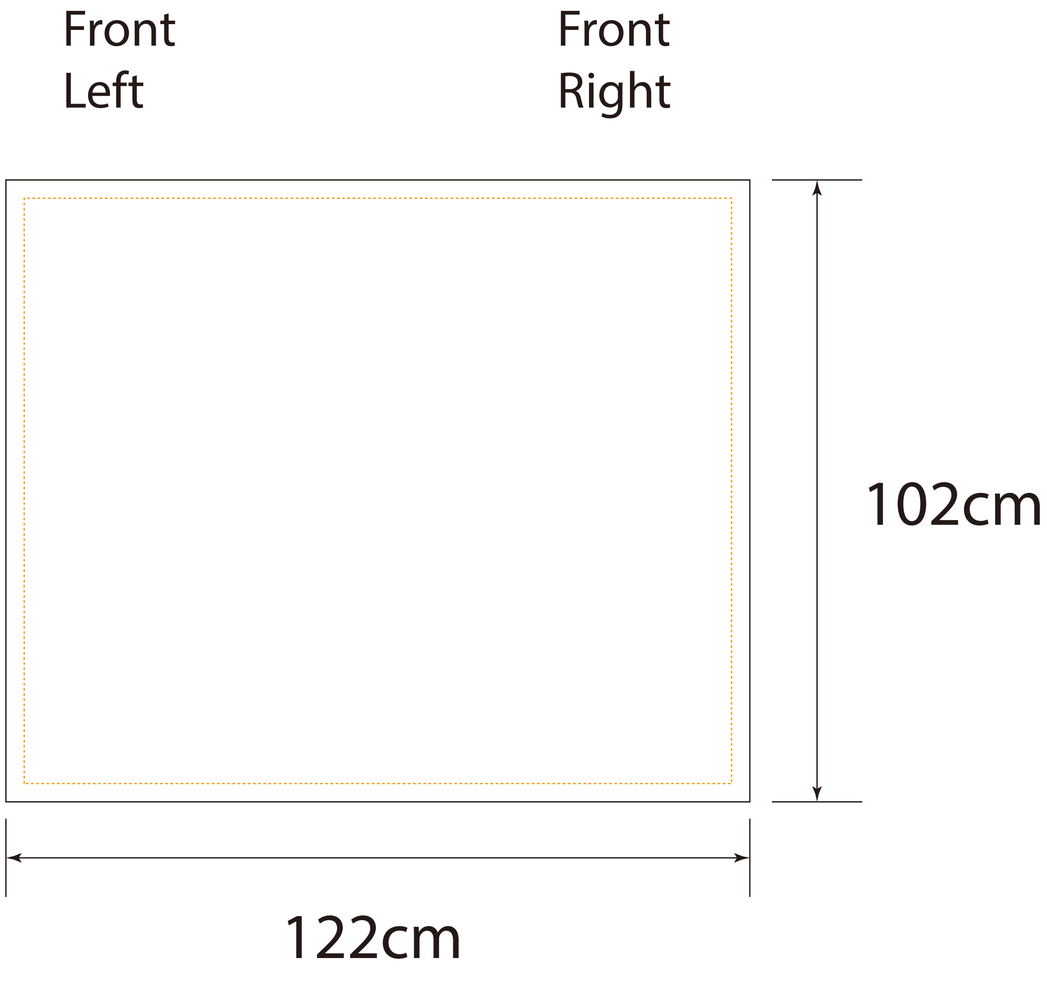
Front
Left
Front
Right
102cm
122cm

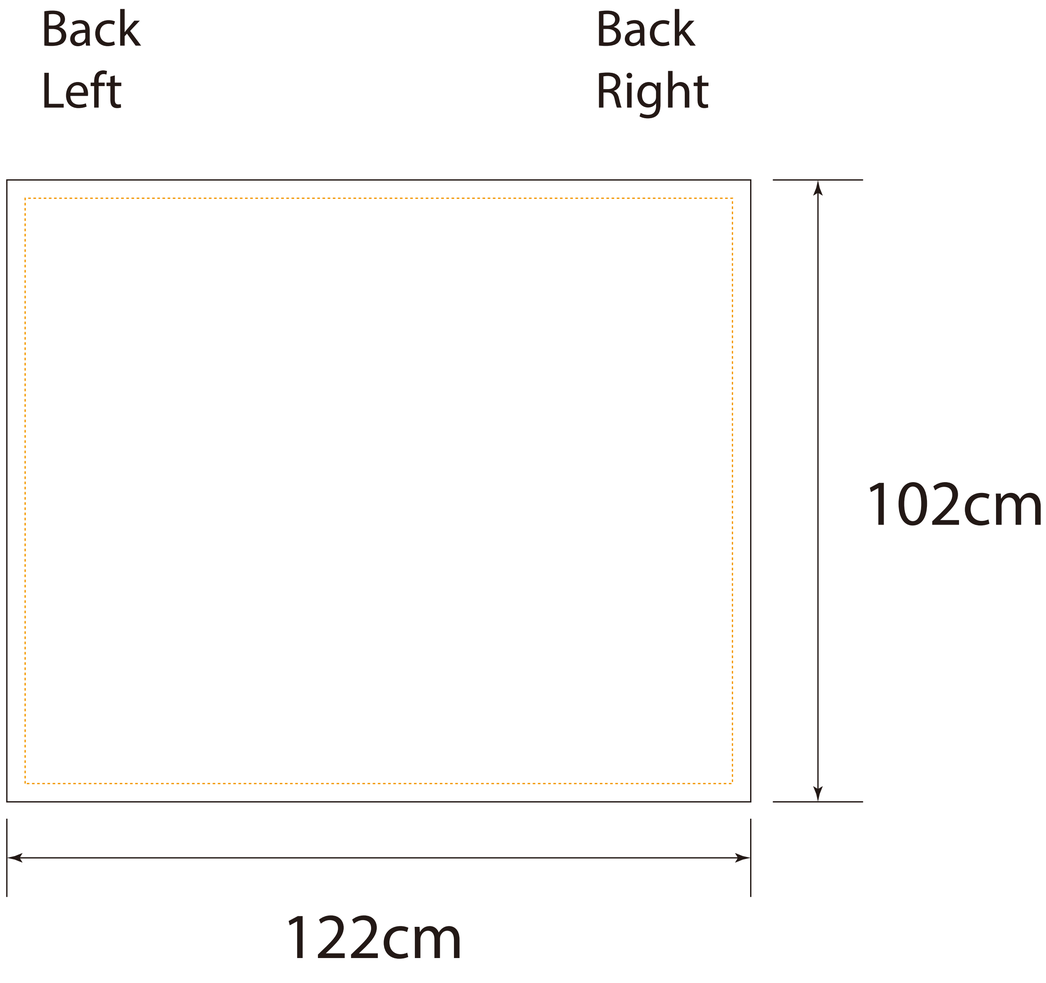
Back
Left
Back
Right
102cm
122cm