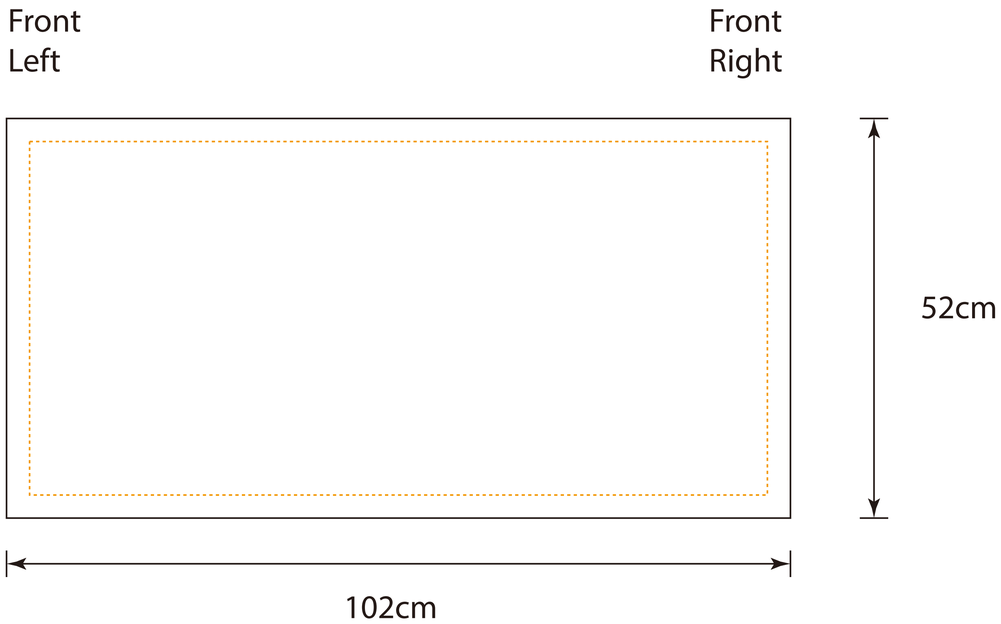
Front
Left
Front
Right
52cm
102cm

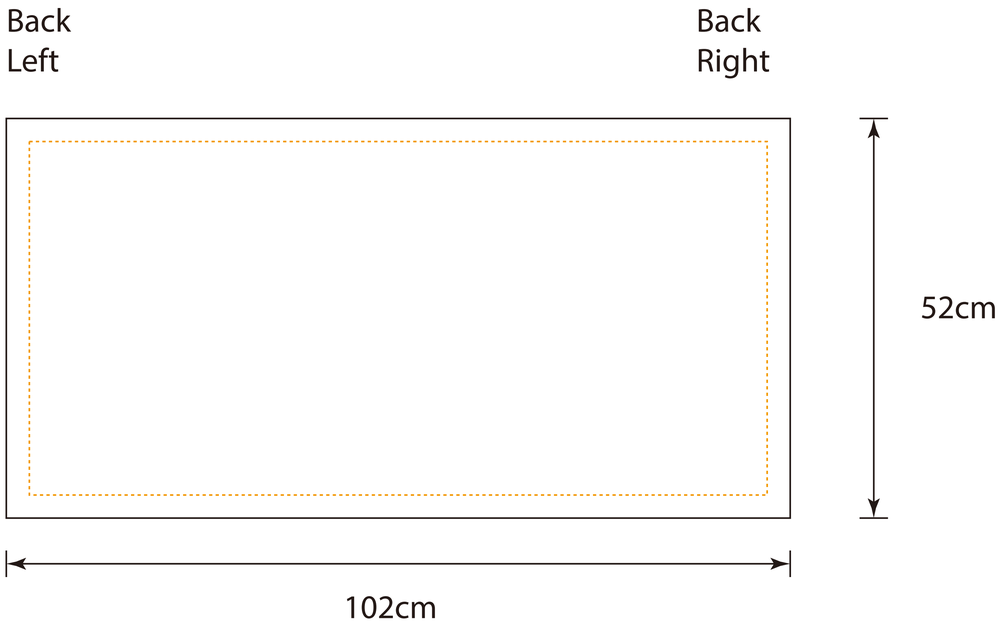
Back
Left
Back
Right
52cm
102cm