Front Left

Front Right

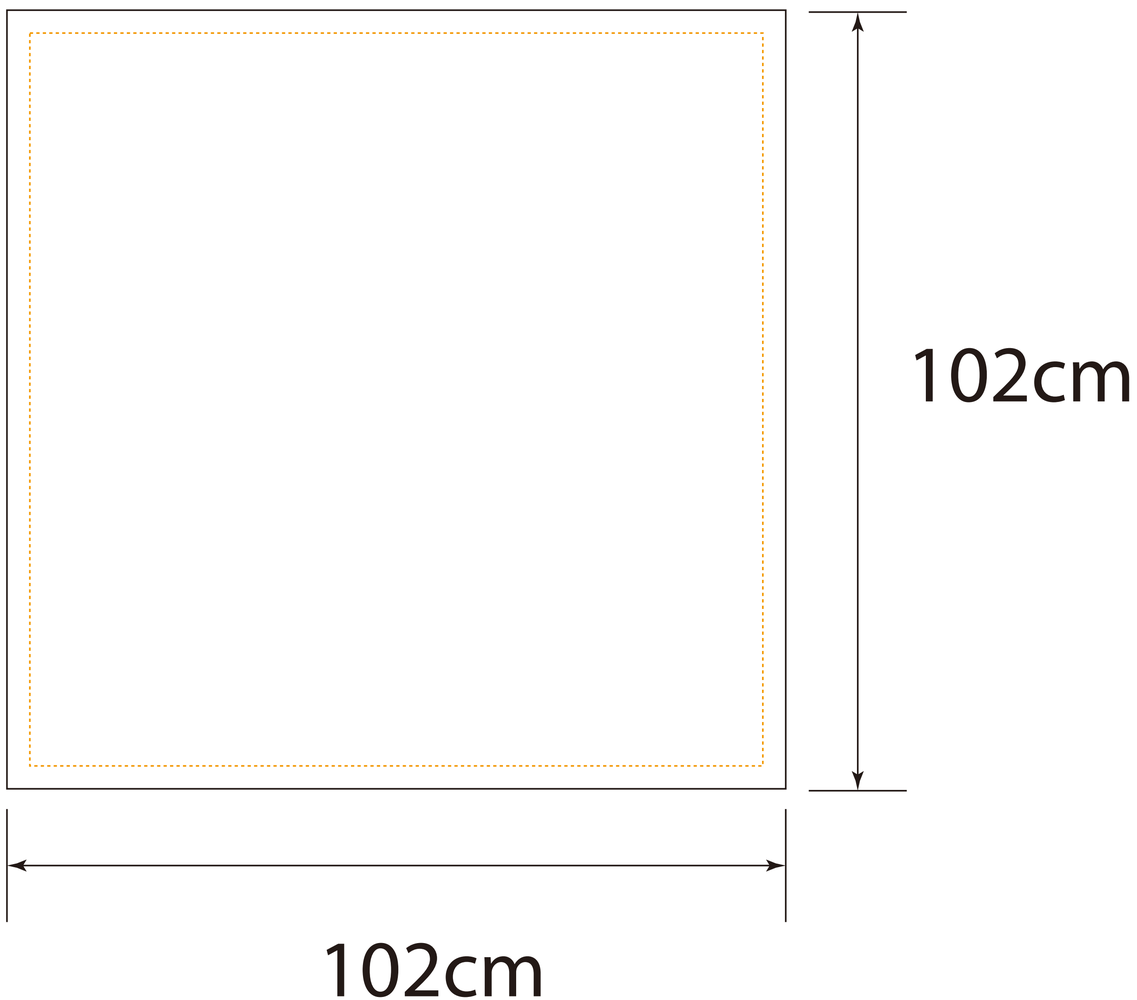

Back Left
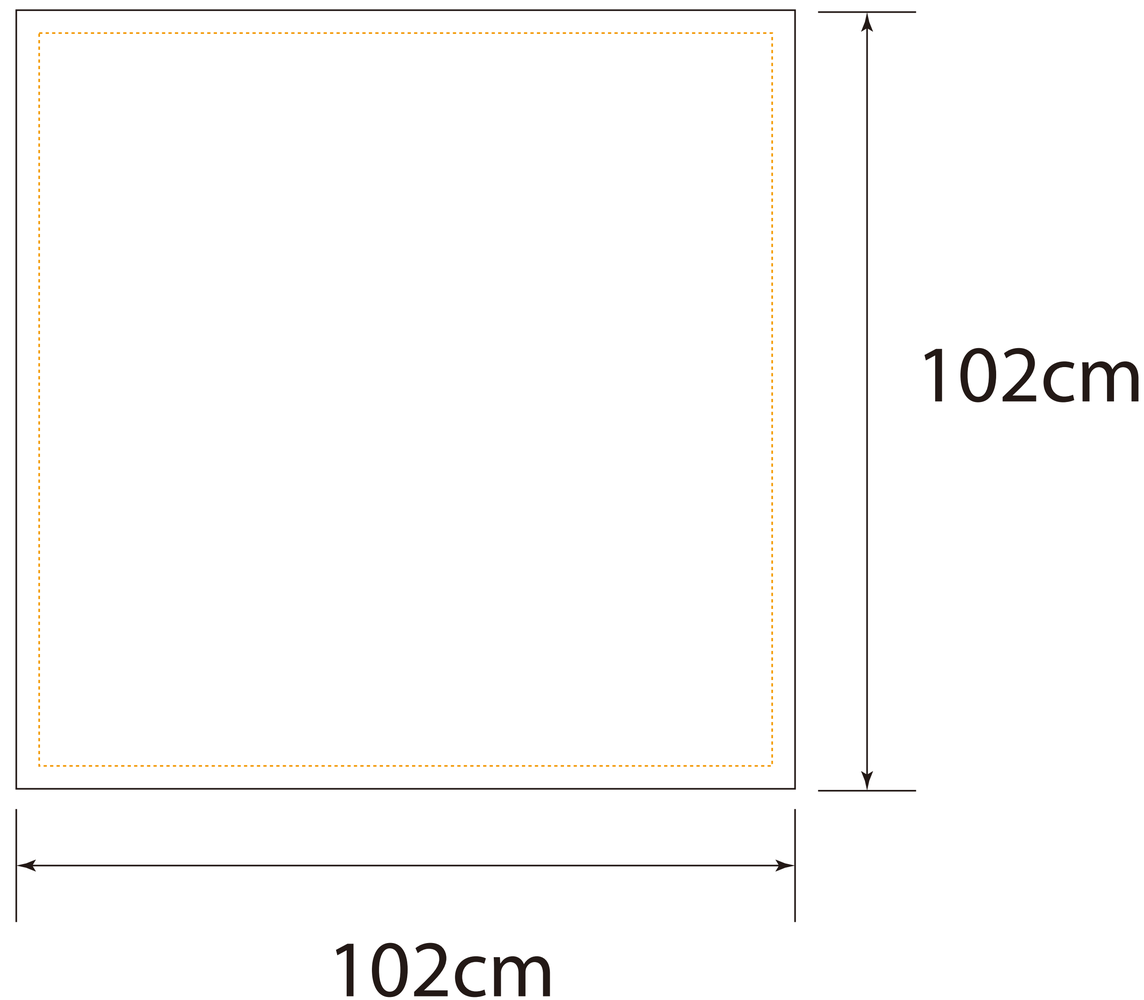
Back Right