1:10

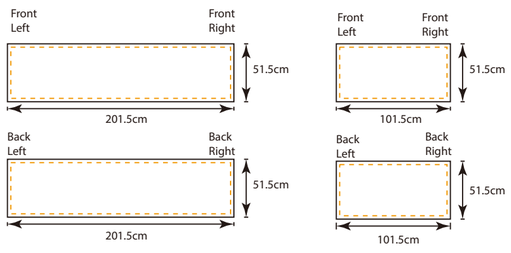
Front Left
Front Right
51.5cm
201.5cm
Front Left
Front Right
51.5cm
101.5cm
Back Left
Back Right
51.5cm
201.5cm
Back Left
Back Right
51.5cm
101.5cm

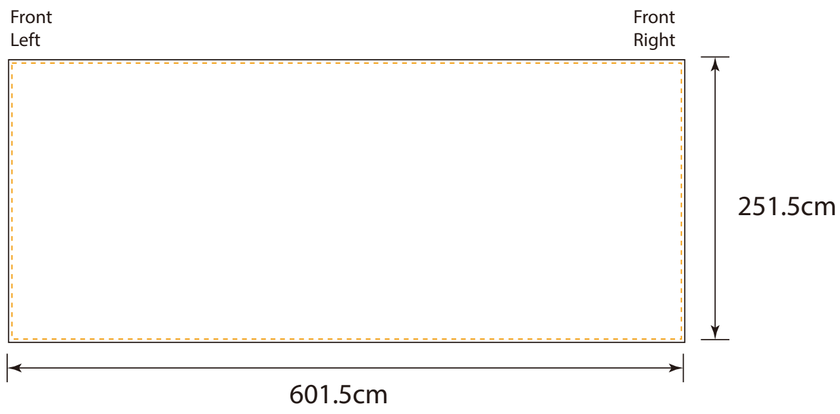
Front Left
Front Right
251.5cm
601.5cm

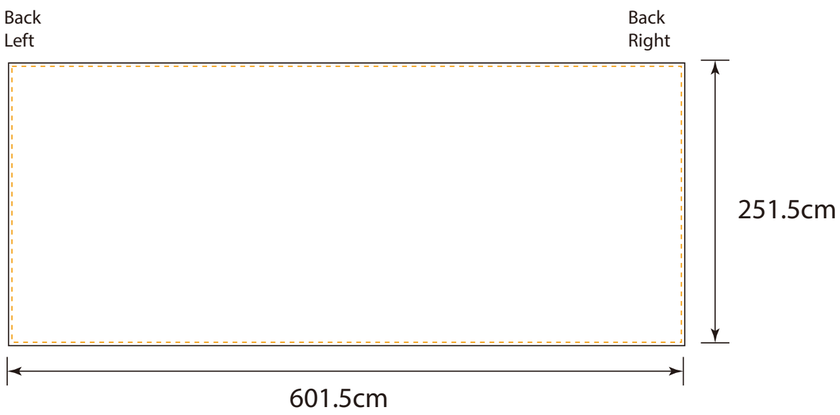
Back Left
Back Right
251.5cm
601.5cm

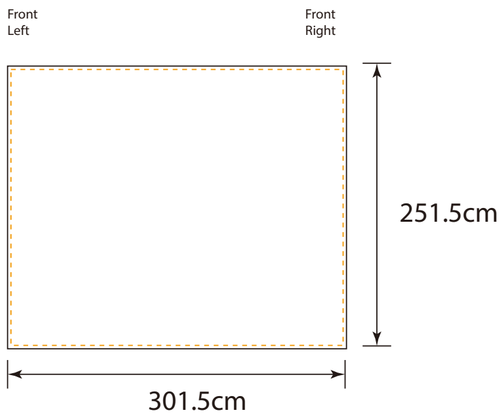
Front Left
Front Right
251.5cm
301.5cm

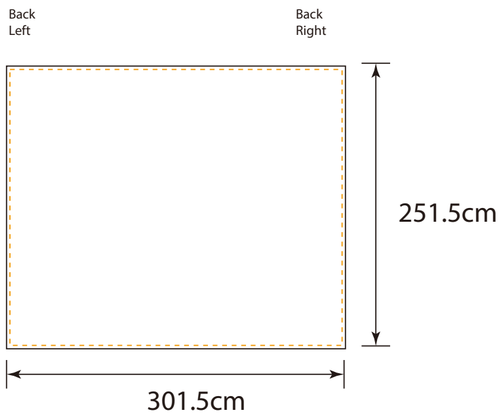
Back Left
Back Right
251.5cm
301.5cm

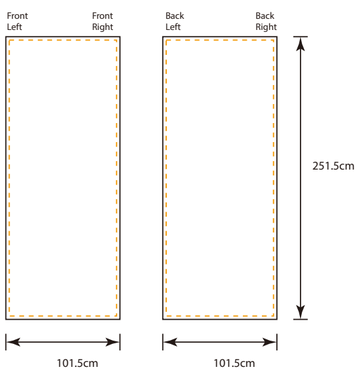
Front Left
Front Right
Back Left
Back Right
251.5cm
101.5cm
101.5cm

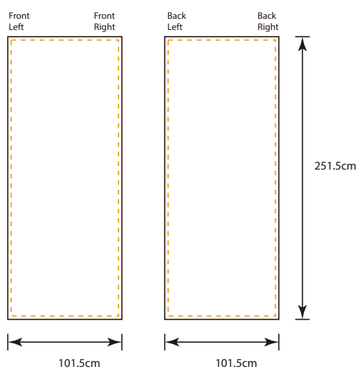
Front Left
Front Right
Back Left
Back Right
251.5cm
101.5cm
101.5cm

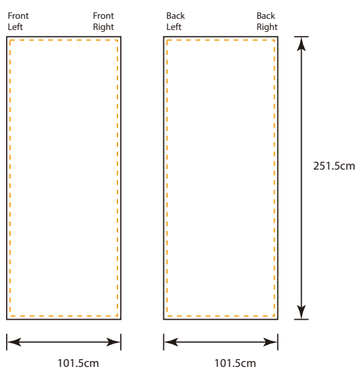
Front Left
Front Right
Back Left
Back Right
251.5cm
101.5cm
101.5cm

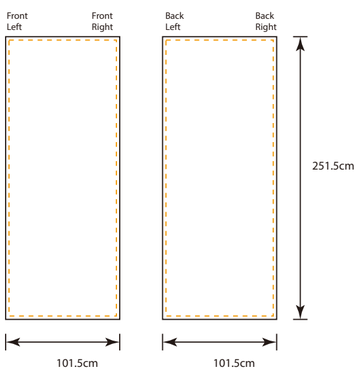
Front Left
Front Right
Back Left
Back Right
251.5cm
101.5cm
101.5cm

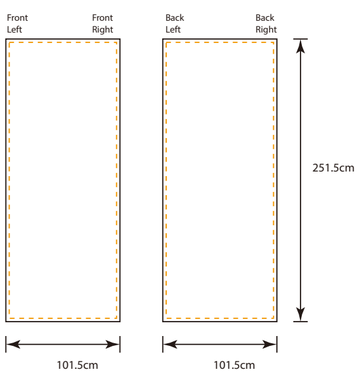
Front Left
Front Right
Back Left
Back Right
251.5cm
101.5cm
101.5cm

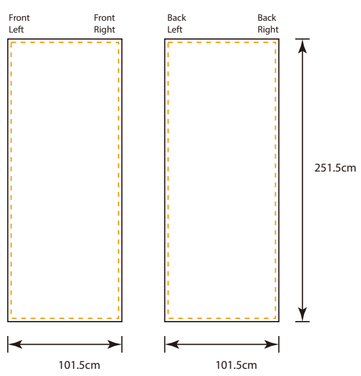
Front Left
Front Right
Back Left
Back Right
251.5cm
101.5cm
101.5cm

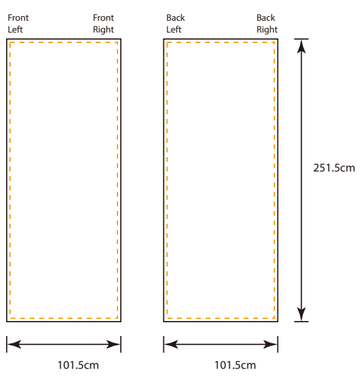
Front Left
Front Right
Back Left
Back Right
251.5cm
101.5cm
101.5cm

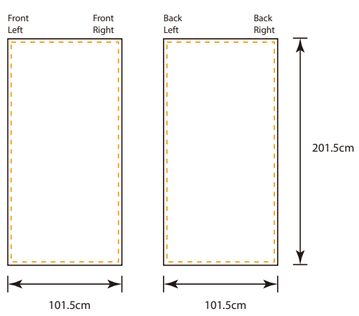
Front Left
Front Right
Back Left
Back Right
201.5cm
101.5cm
101.5cm

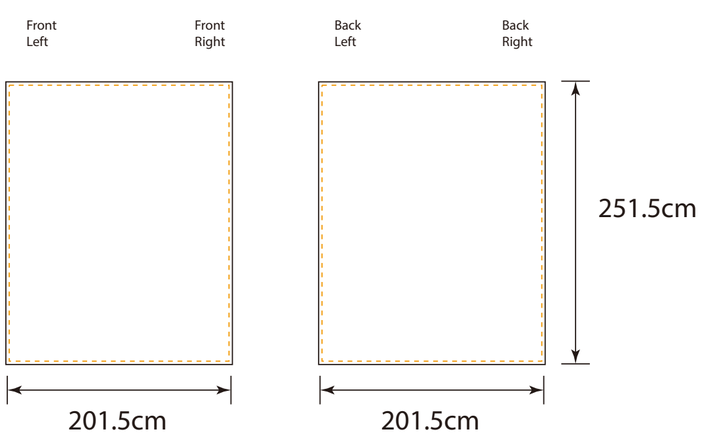
Front Left
Front Right
Back Left
Back Right
251.5cm
201.5cm
201.5cm

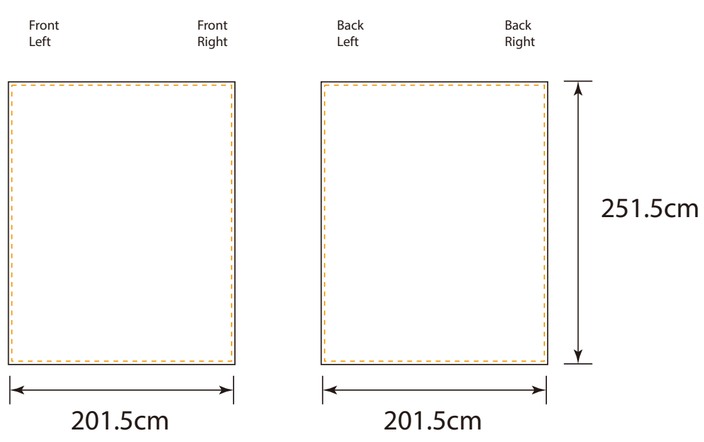
Front Left
Front Right
Back Left
Back Right
251.5cm
201.5cm
201.5cm

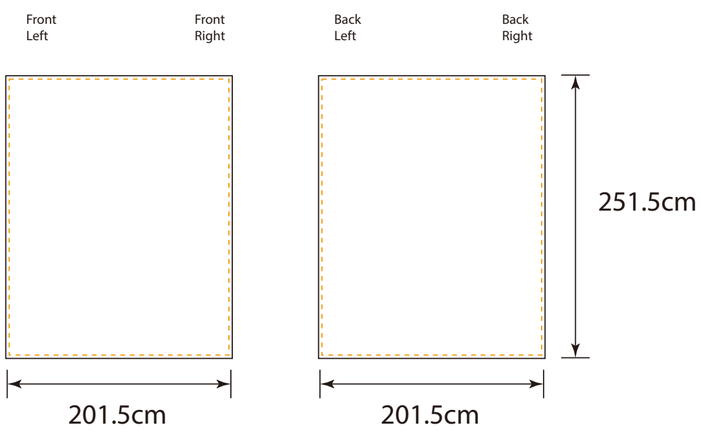
Front Left
Front Right
Back Left
Back Right
251.5cm
201.5cm
201.5cm

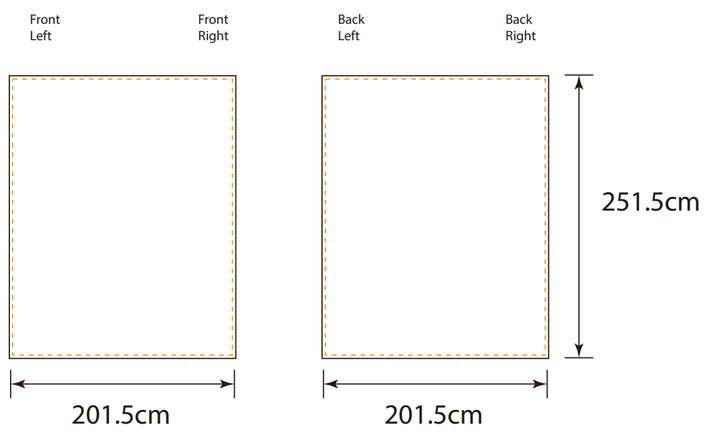
Front Left
Front Right
Back Left
Back Right
251.5cm
201.5cm
201.5cm