1.2

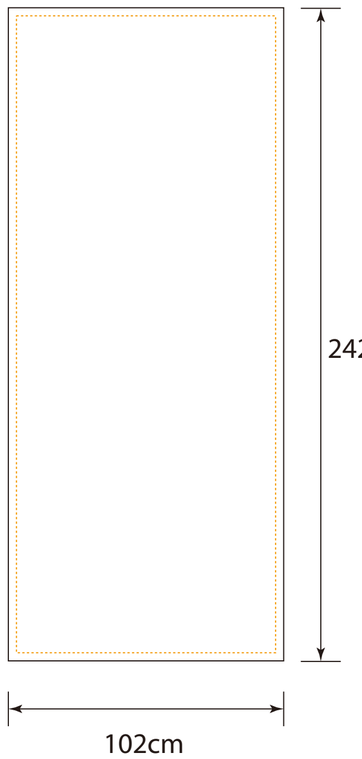
242cm
102cm

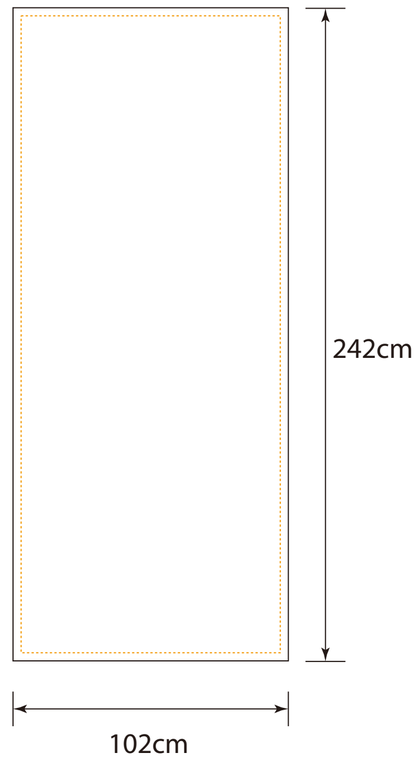
242cm
102cm

SEE THE FUTURE
NEW DIMENSION
LET'S GO
VIRTUALLY
CONTROL
THE FUTURE

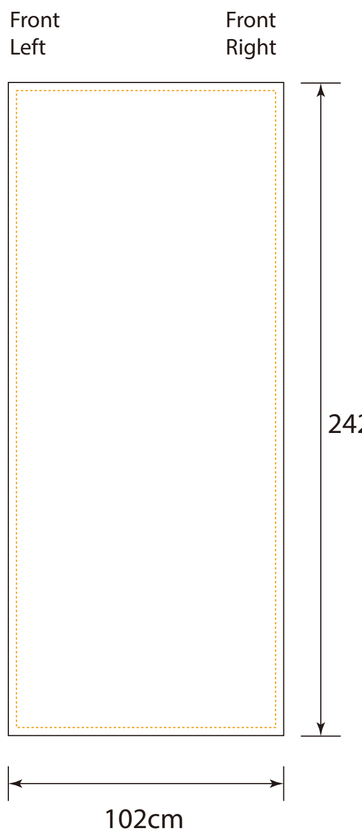
Front
Left
Front
Right
242cm
102cm

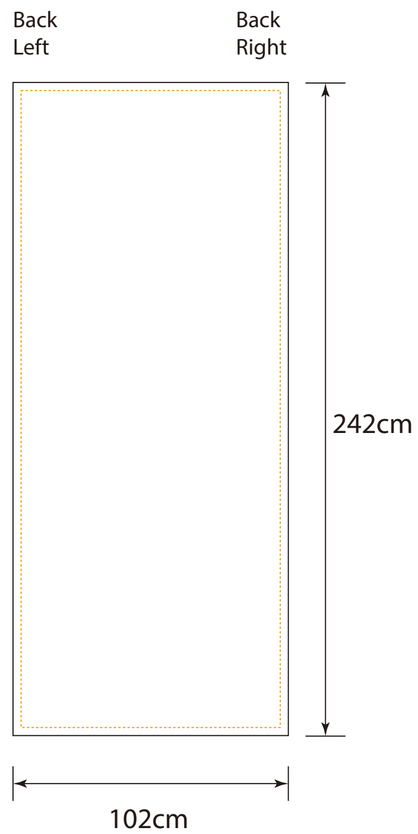
Back
Left
Back
Right
242cm
102cm

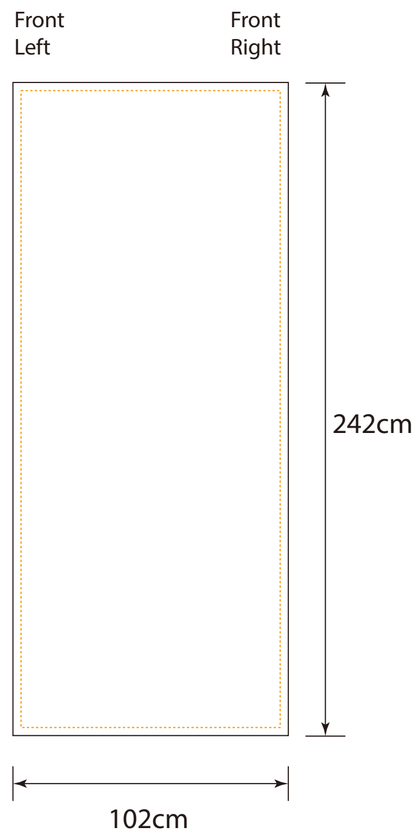
Front
Left
Front
Right
242cm
102cm

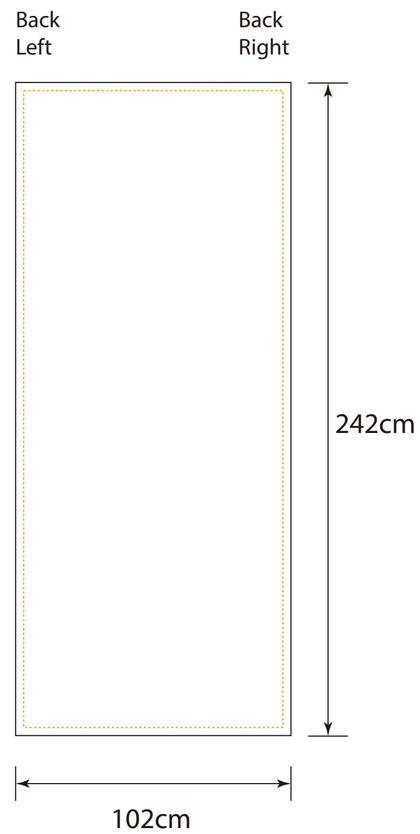
Back
Left
Back
Right
242cm
102cm

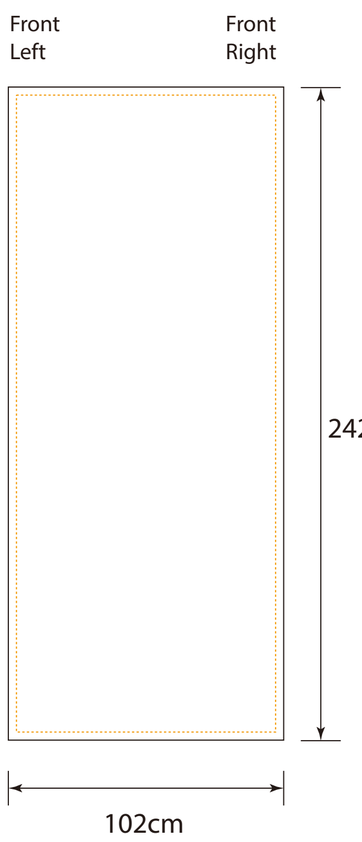
Front
Left
Front
Right
242cm
102cm

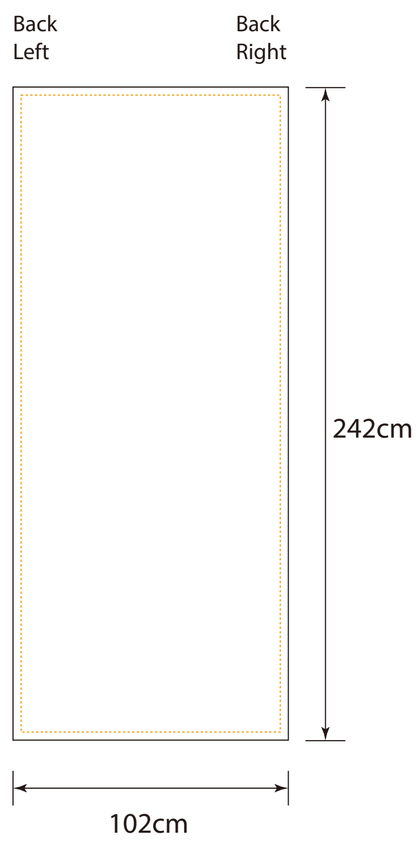
Back
Left
Back
Right
242cm
102cm

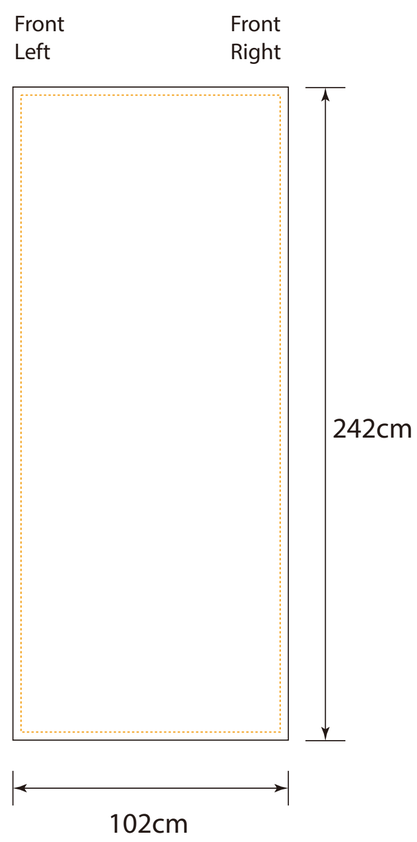
Front
Left
Front
Right
242cm
102cm

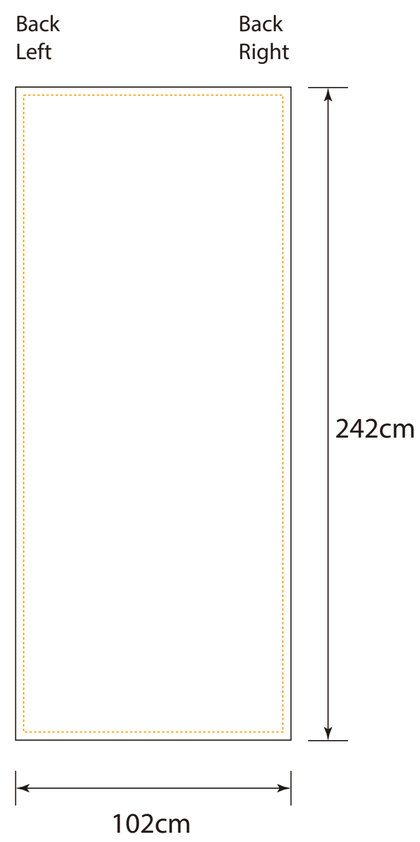
Back
Left
Back
Right
242cm
102cm