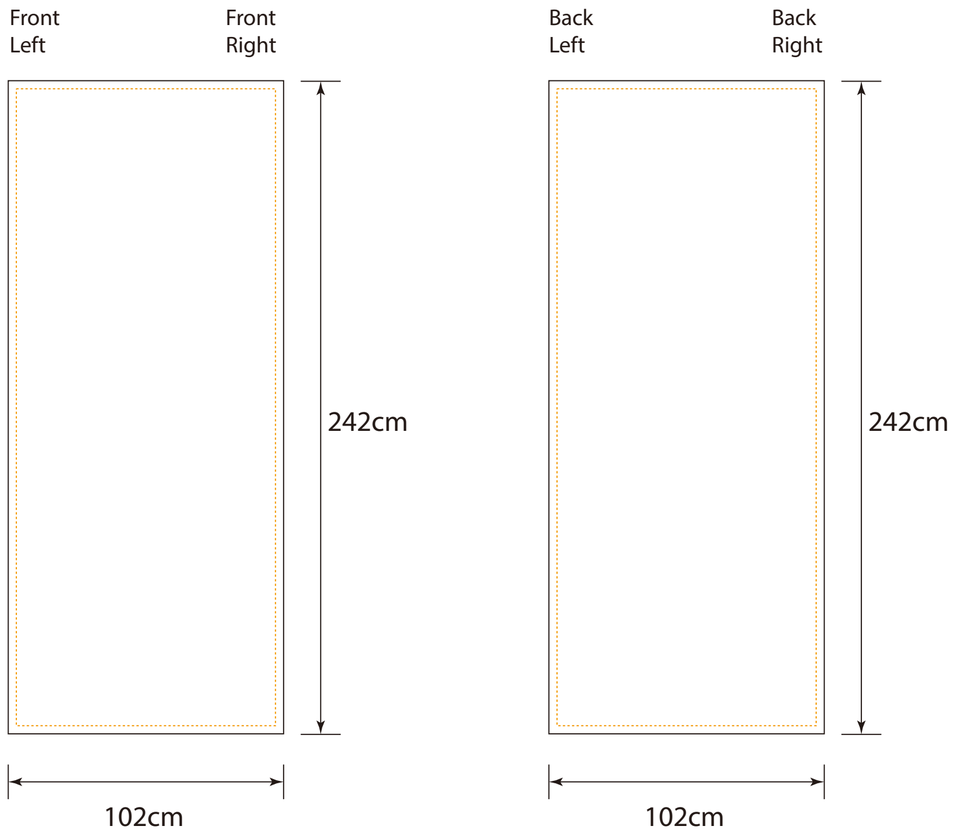
Front Left
Front Right
242cm
102cm
Back Left
Back Right
242cm
102cm

SEE THE FUTURE
NEW DIMENSION
LET'S GO VIRTUAL!
CONTROL THE FUTURE

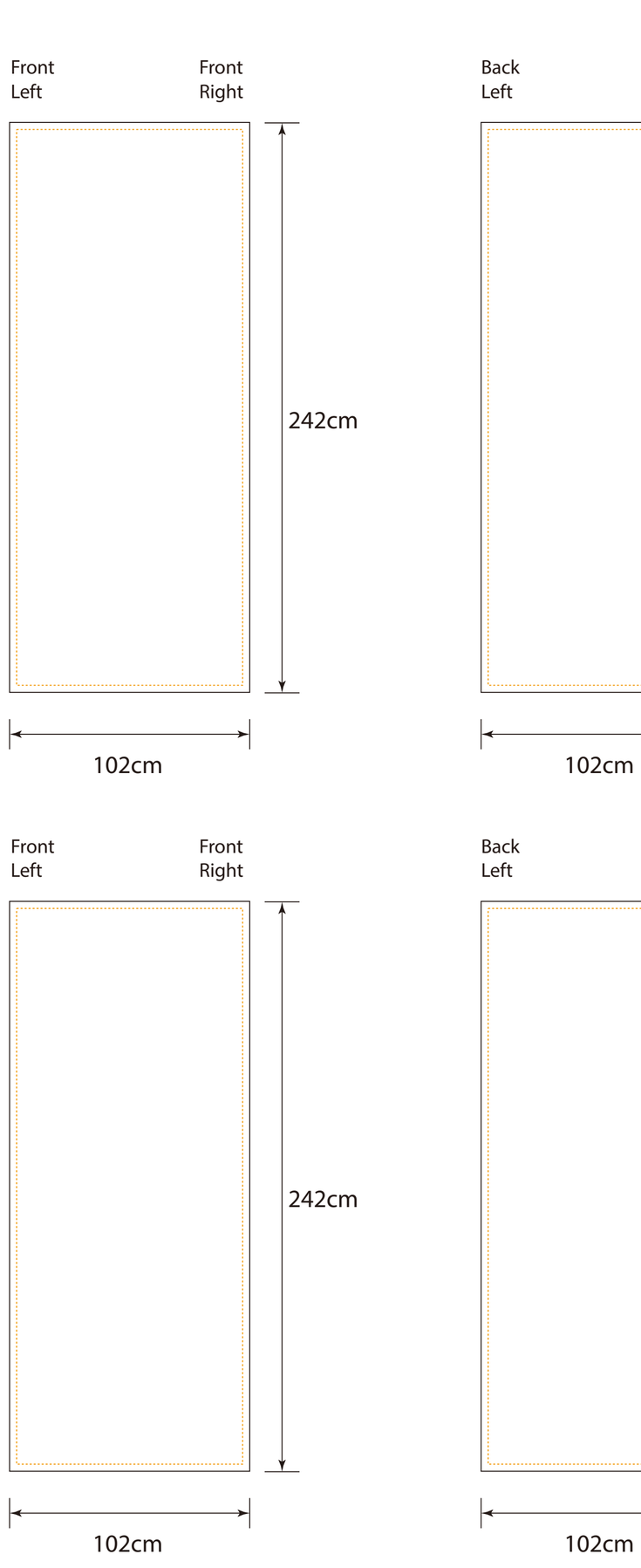
102cm
Front Left
Front Right
242cm
102cm
Back Left
Back Right
242cm
102cm

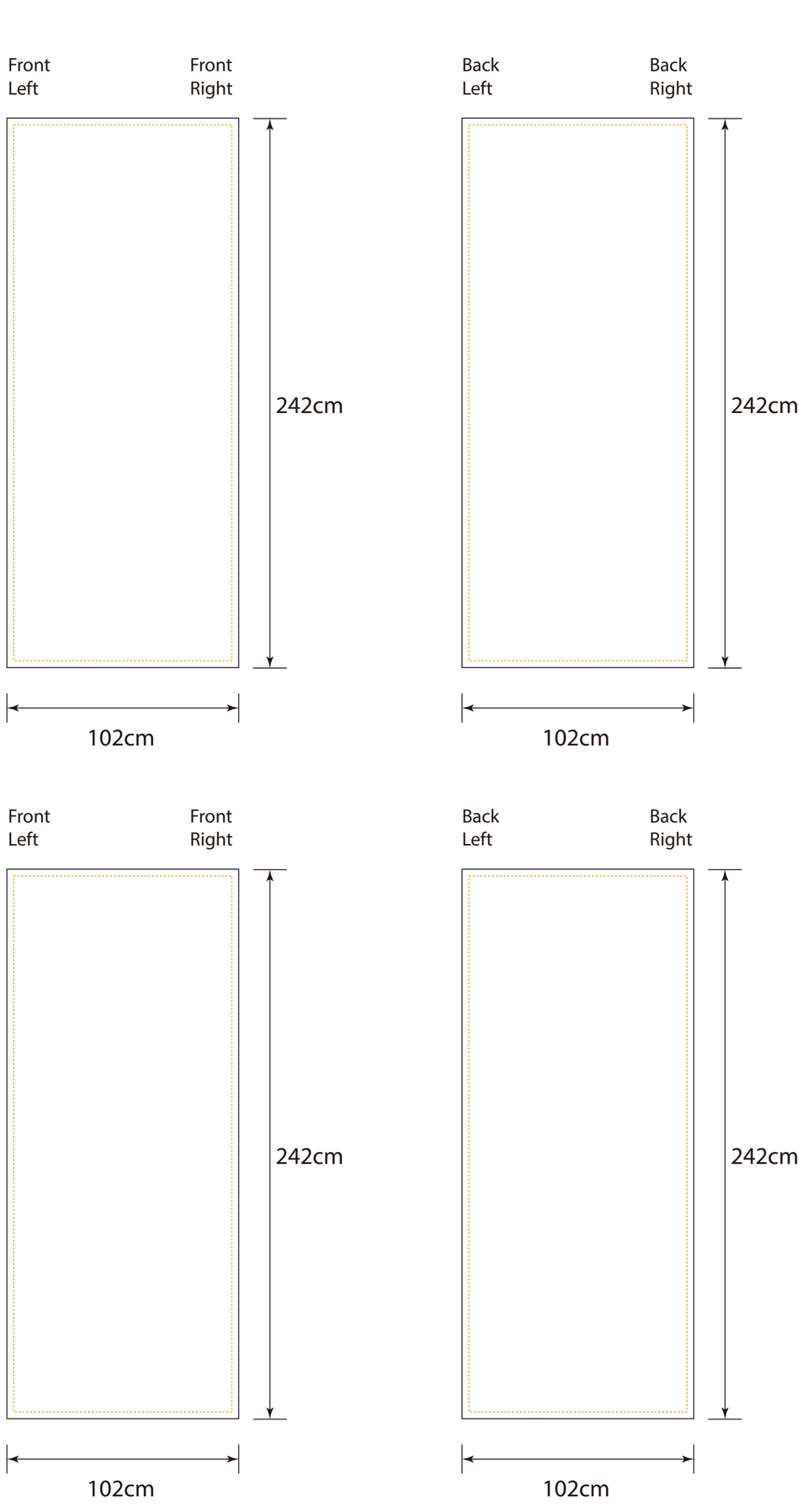
102cm
Front Left
Front Right
242cm
102cm
Back Left
Back Right
242cm
102cm

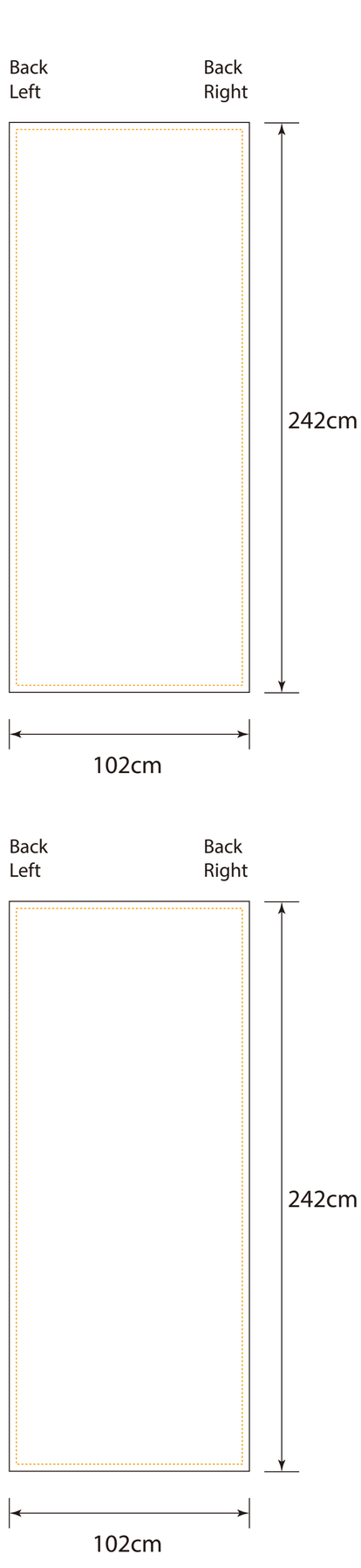
102cm
Front Left
Front Right
242cm
102cm
Back Left
Back Right
242cm
102cm