1:2

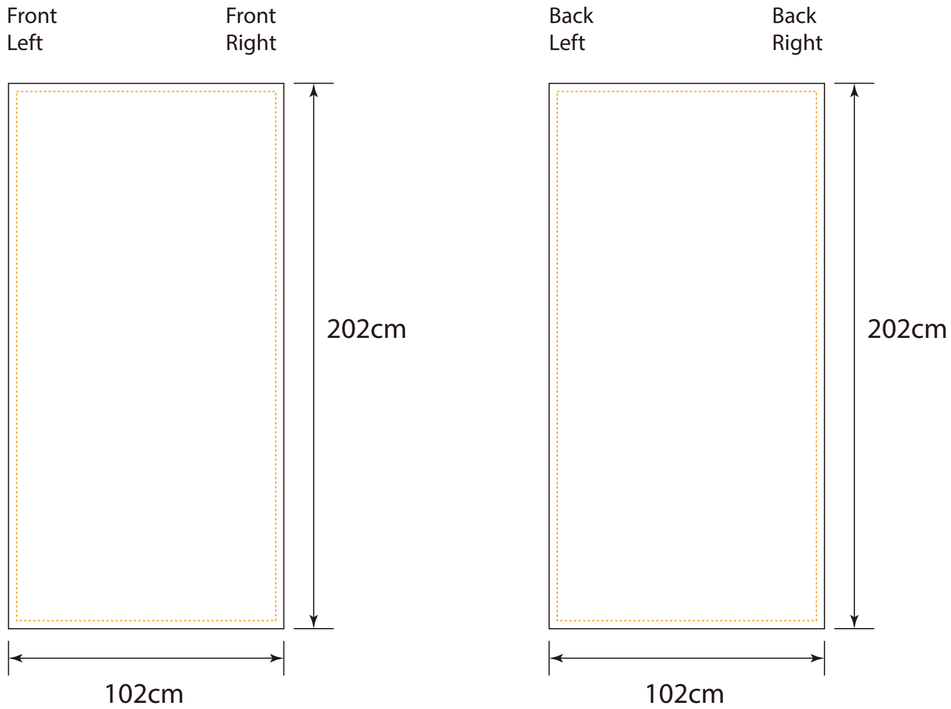
Front Left
Front Right
202cm
102cm
Back Left
Back Right
202cm
102cm

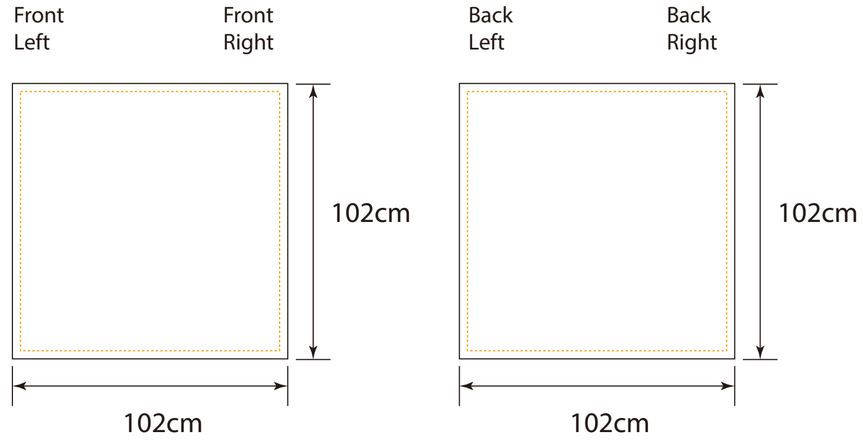
Front Left
Front Right
102cm
102cm
Back Left
Back Right
102cm
102cm

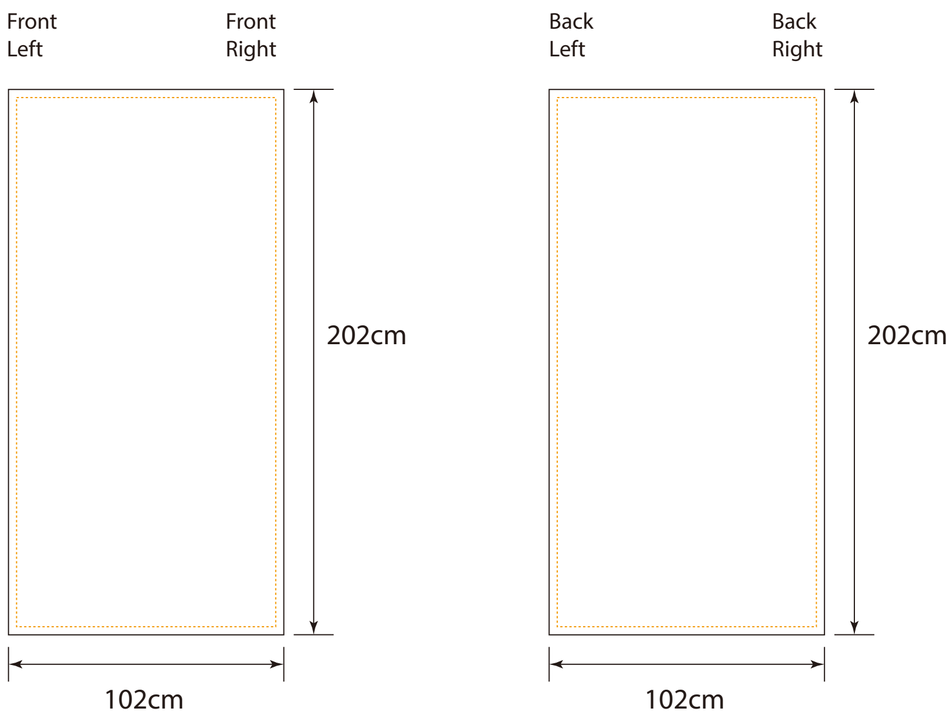
Front Left
Front Right
202cm
102cm
Back Left
Back Right
202cm
102cm

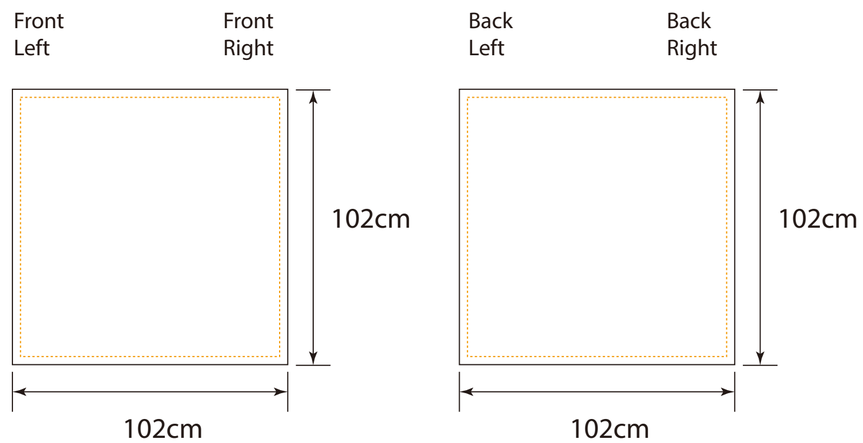
Front Left
Front Right
102cm
102cm
Back Left
Back Right
102cm
102cm

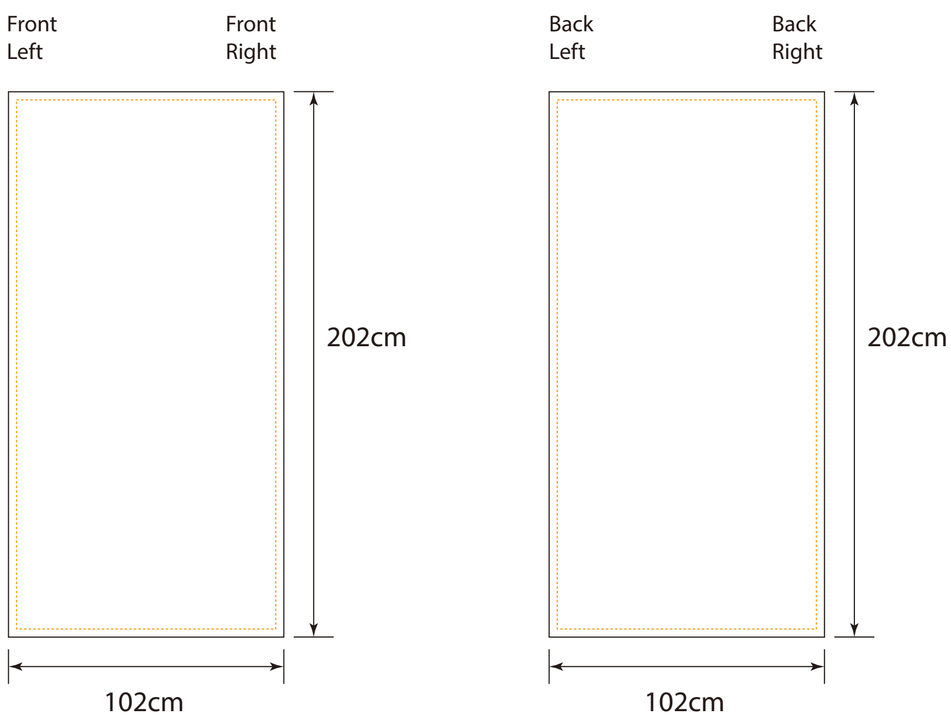
Front Left
Front Right
202cm
102cm
Back Left
Back Right
202cm
102cm

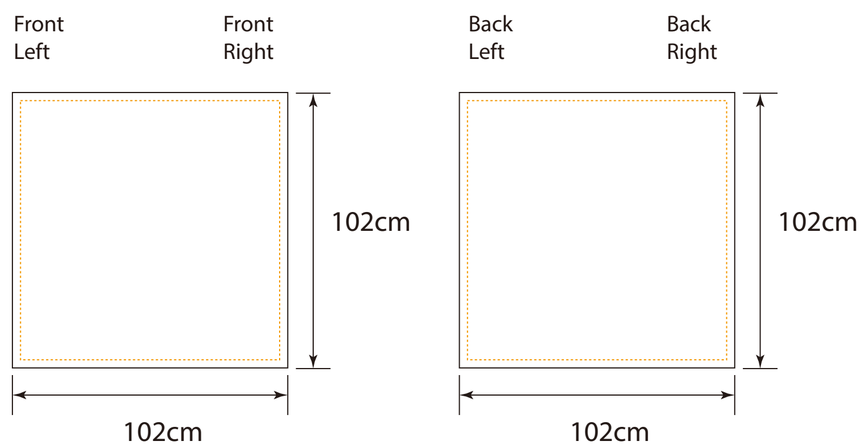
Front Left
Front Right
102cm
102cm
Back Left
Back Right
102cm
102cm