Front Left | Front Right

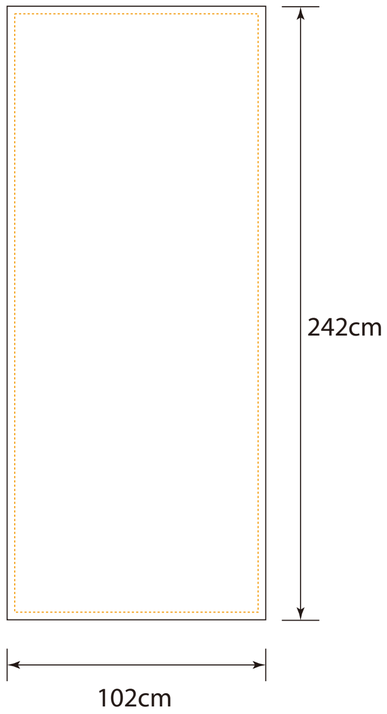

Back Left | Back Right

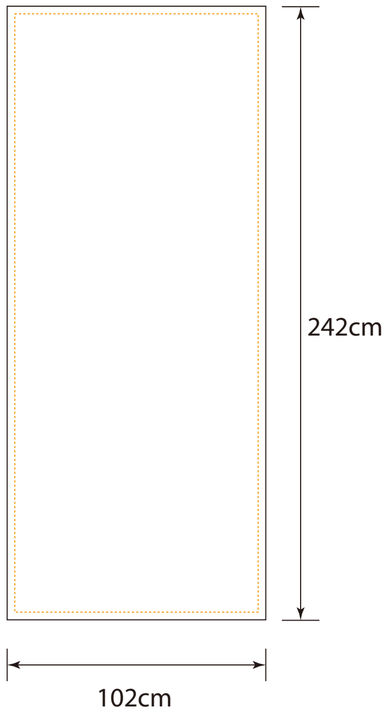

Front Left | Front Right

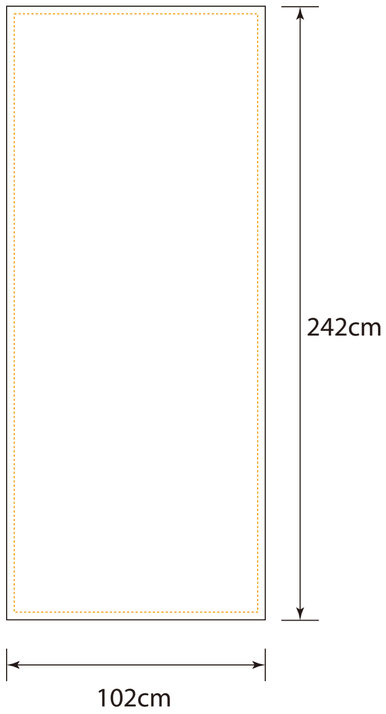

Back Left | Back Right

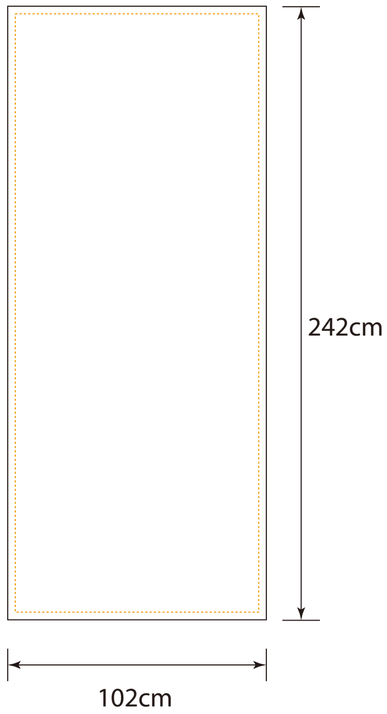

Front Left | Front Right

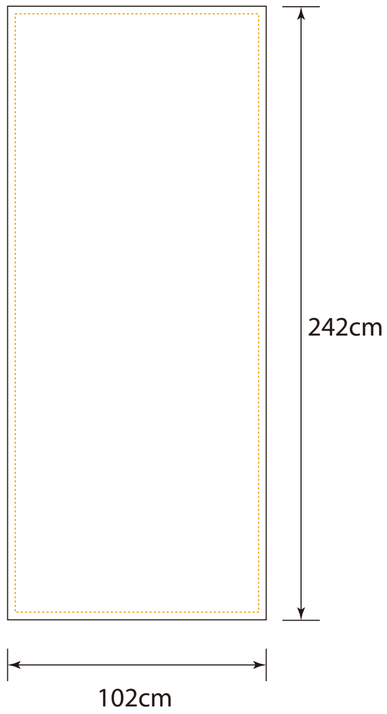

Back Left

Front Left | Front Right

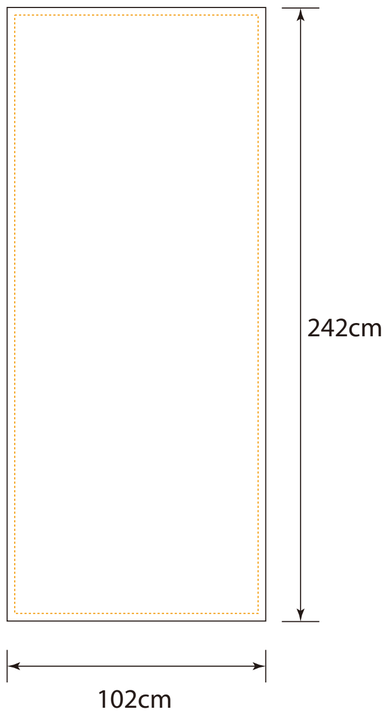

Back Left | Back Right

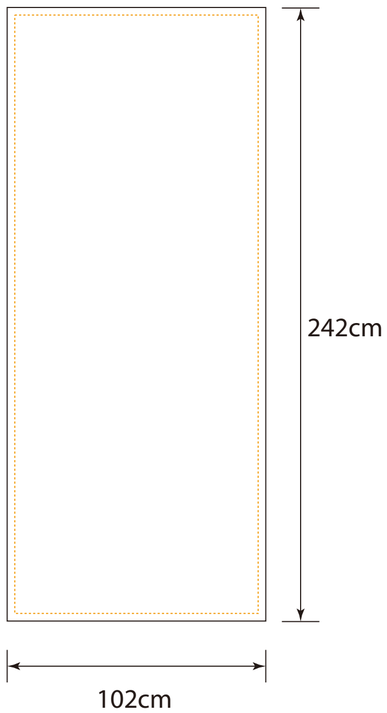

Front Left | Front Right

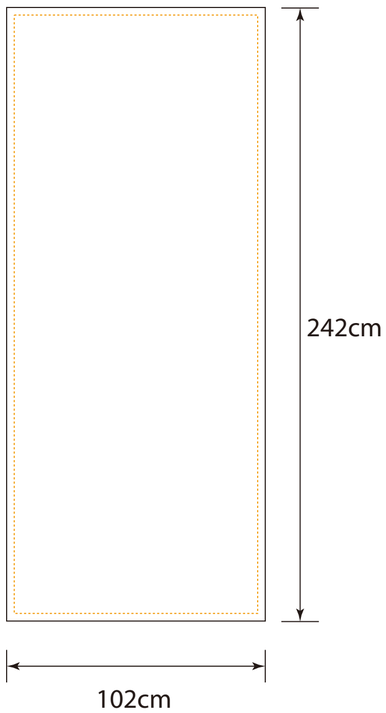

Back Left | Back Right

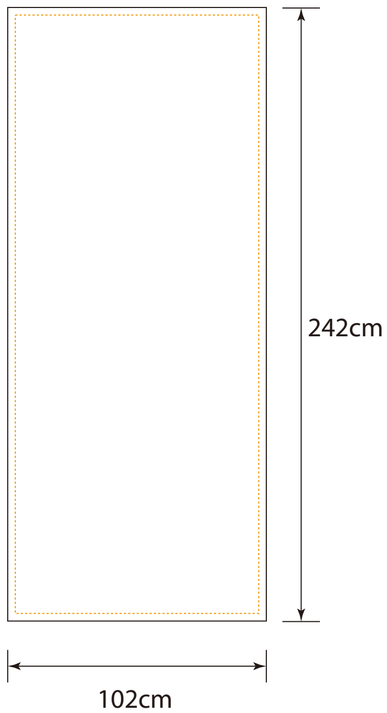

Front Left | Front Right

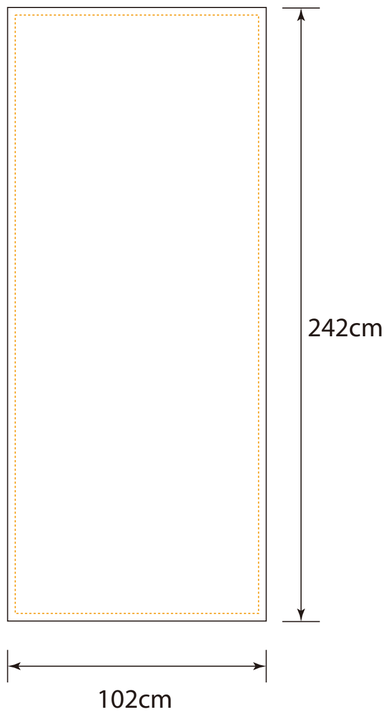

Back Left

Front Left | Front Right

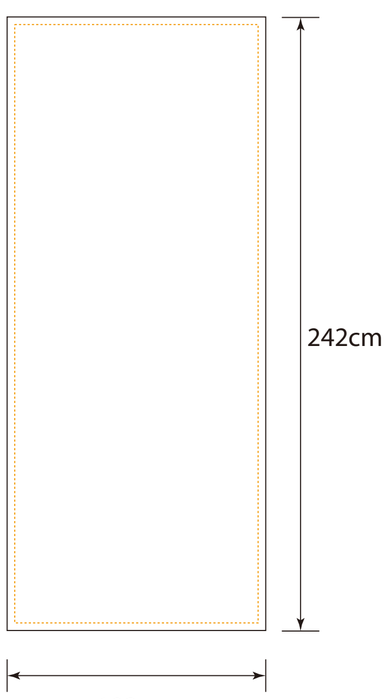

Back Left | Back Right

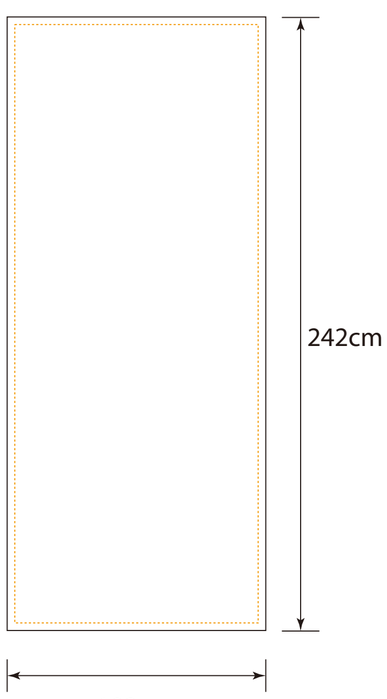

Front Left | Front Right

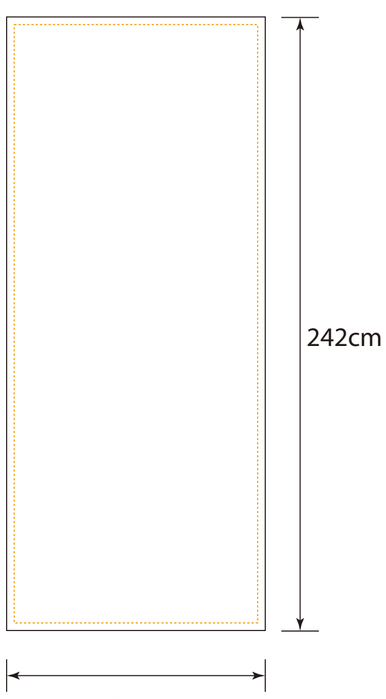

Back Left | Back Right

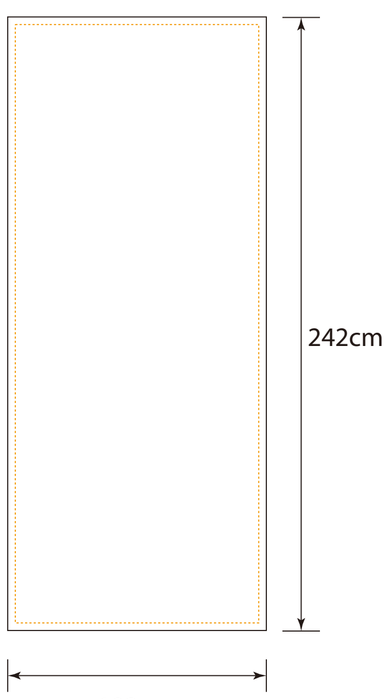

Front Left | Front Right

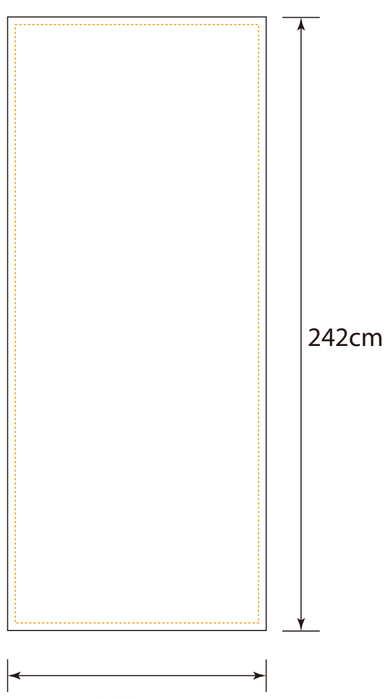

Back Left