6.5x6.5FT

Front

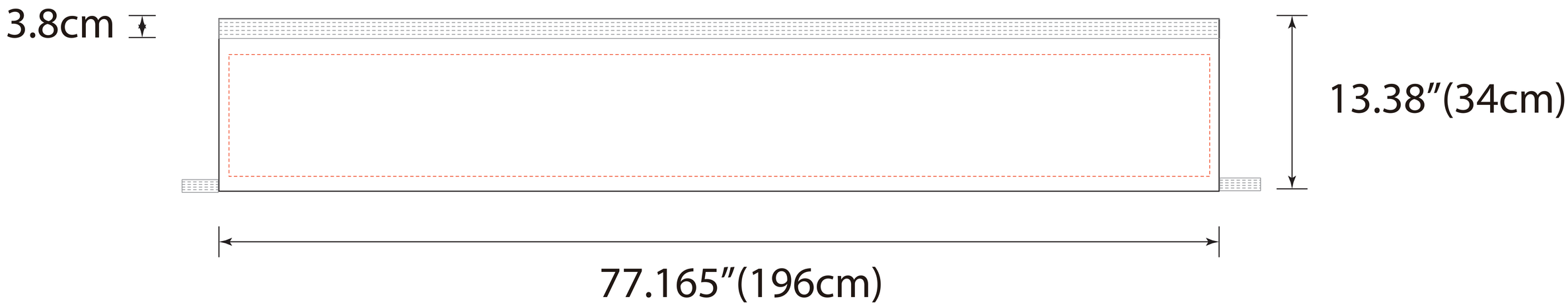
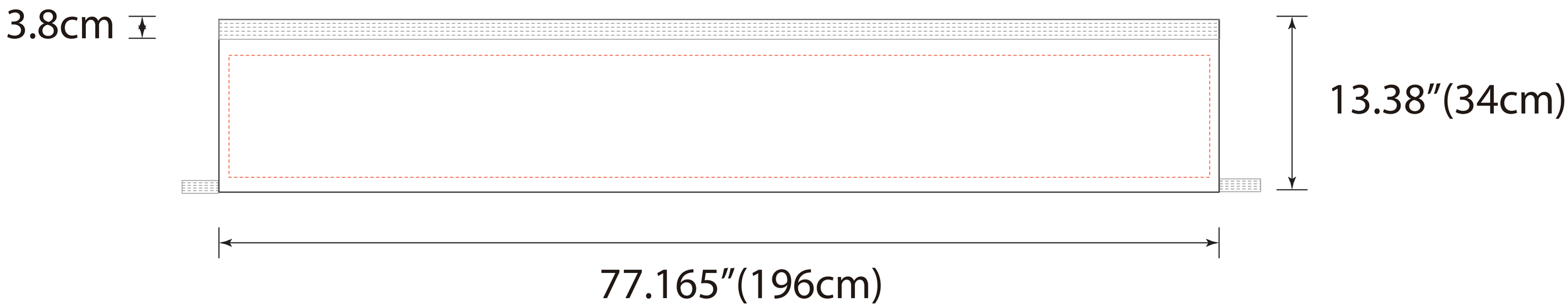
Back