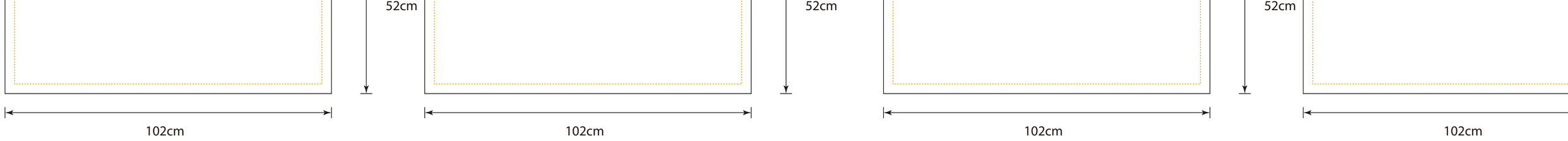
52cm
102cm
52cm
102cm
52cm
102cm
52cm
102cm

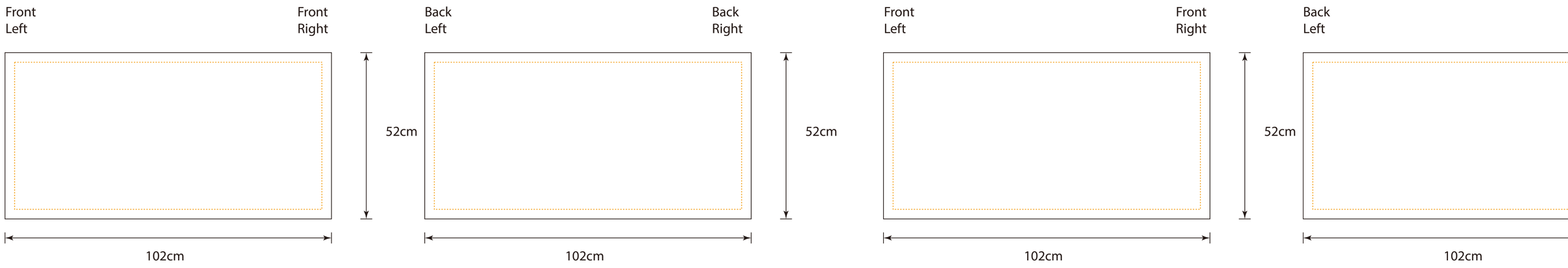
Front Left
Front Right
52cm
102cm
Back Left
Back Right
52cm
102cm
Front Left
Front Right
52cm
102cm
Back Left
52cm
102cm

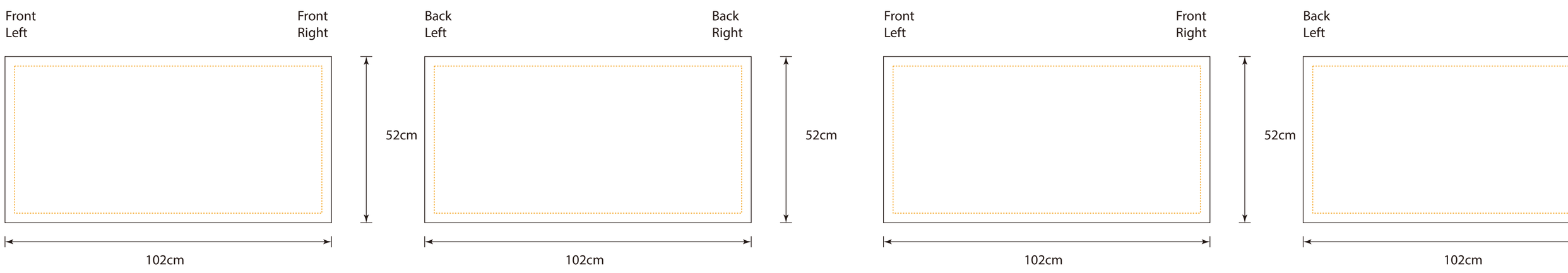
Front Left
Front Right
52cm
102cm
Back Left
Back Right
52cm
102cm
Front Left
Front Right
52cm
102cm
Back Left
52cm
102cm

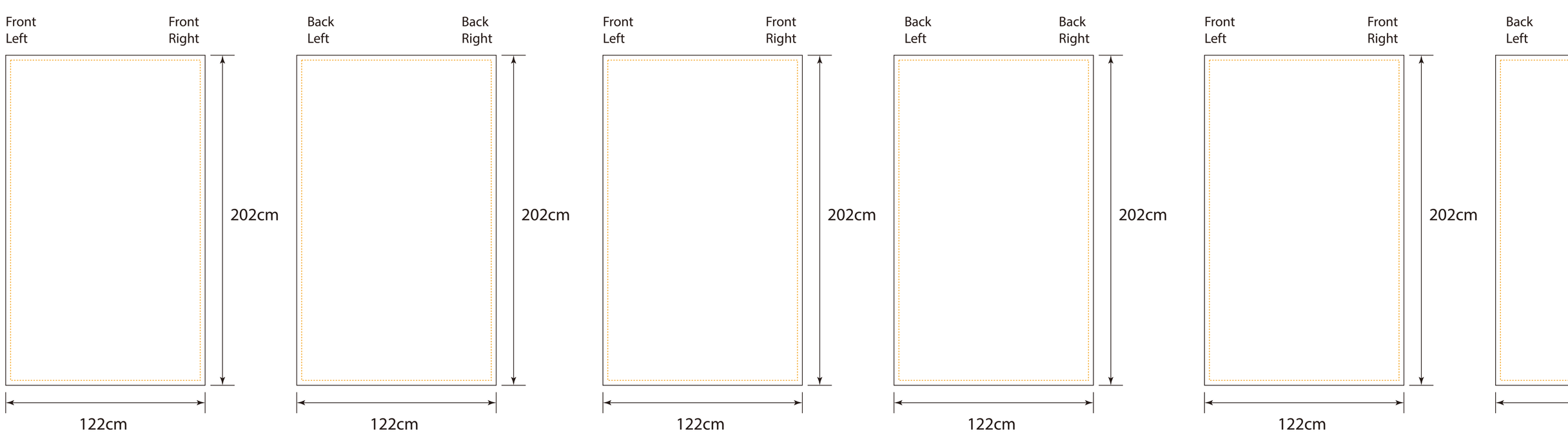
Front Left
Front Right
202cm
122cm
Back Left
Back Right
202cm
122cm
Front Left
Front Right
202cm
122cm
Back Left
Back Right
202cm
122cm
Front Left
202cm
122cm
Front Right
Back Left
202cm
122cm

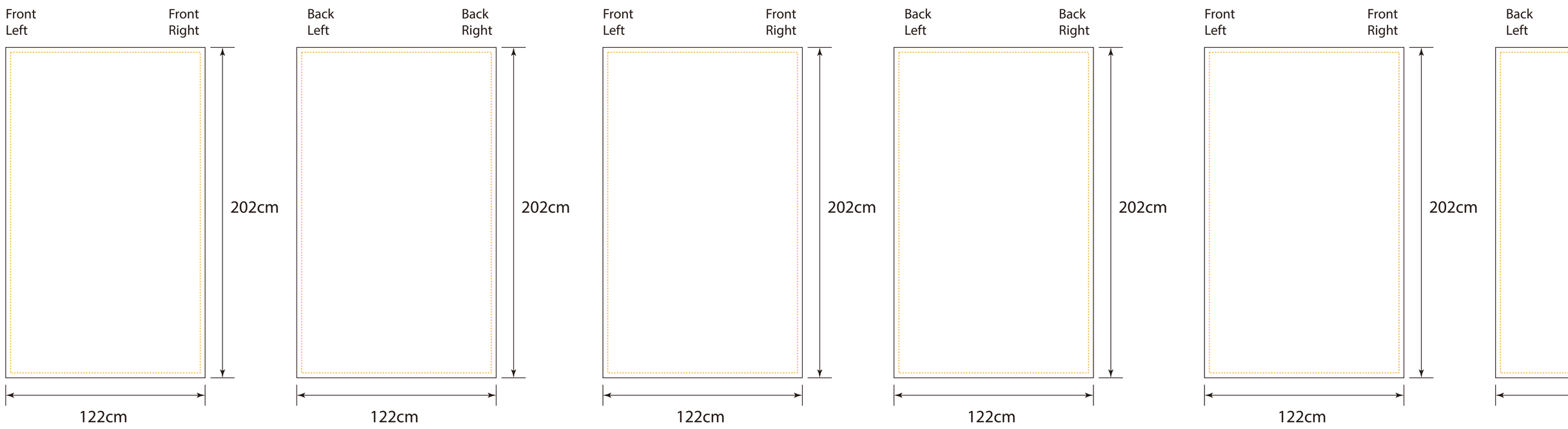
Front Left
Front Right
202cm
122cm
Back Left
Back Right
202cm
122cm
Front Left
Front Right
202cm
122cm
Back Left
Back Right
202cm
122cm
Front Left
Front Right
202cm
122cm
Back Left
122cm