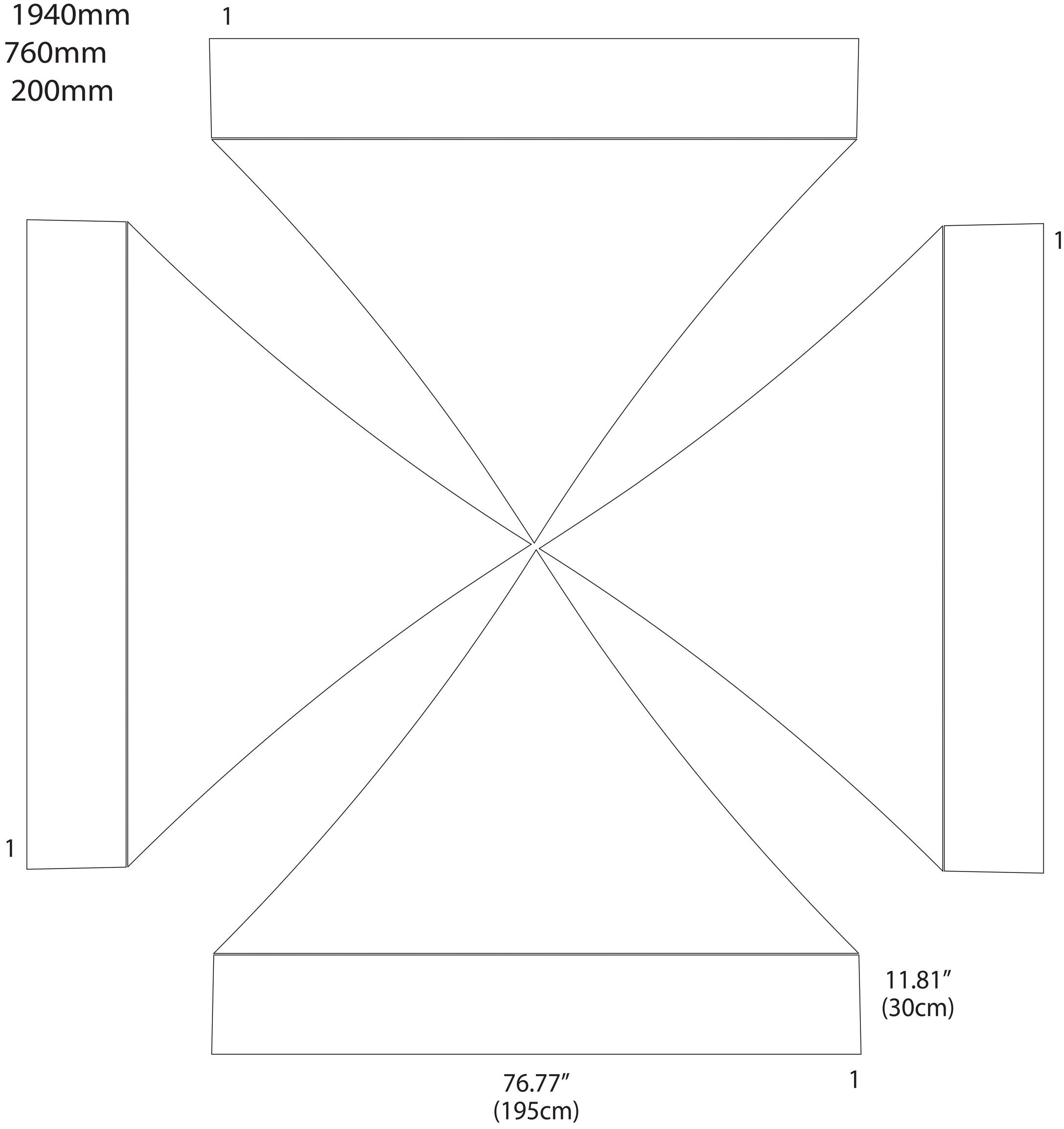1. 1940mm
2. 1940mm
3. 760mm
4. 200mm