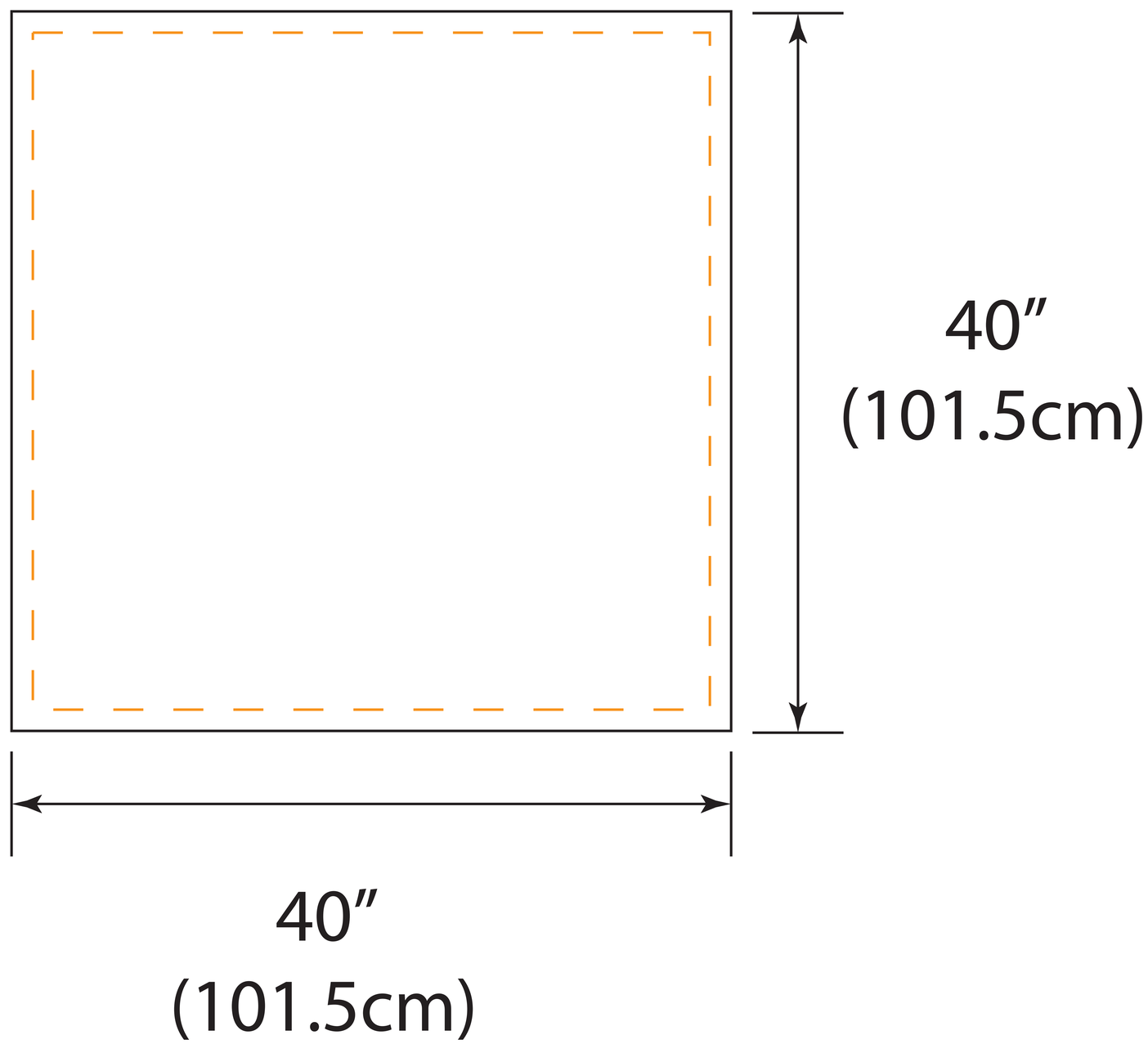
40″
(101.5cm)
40″
(101.5cm)