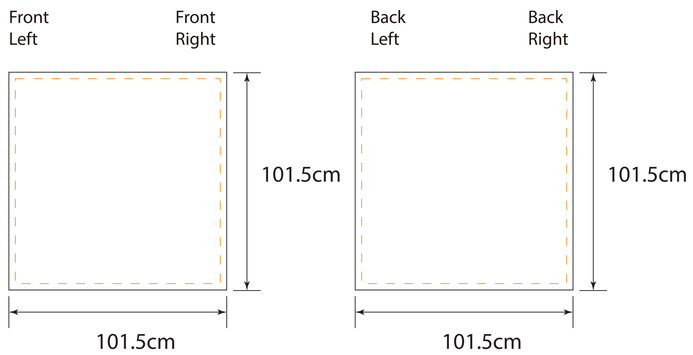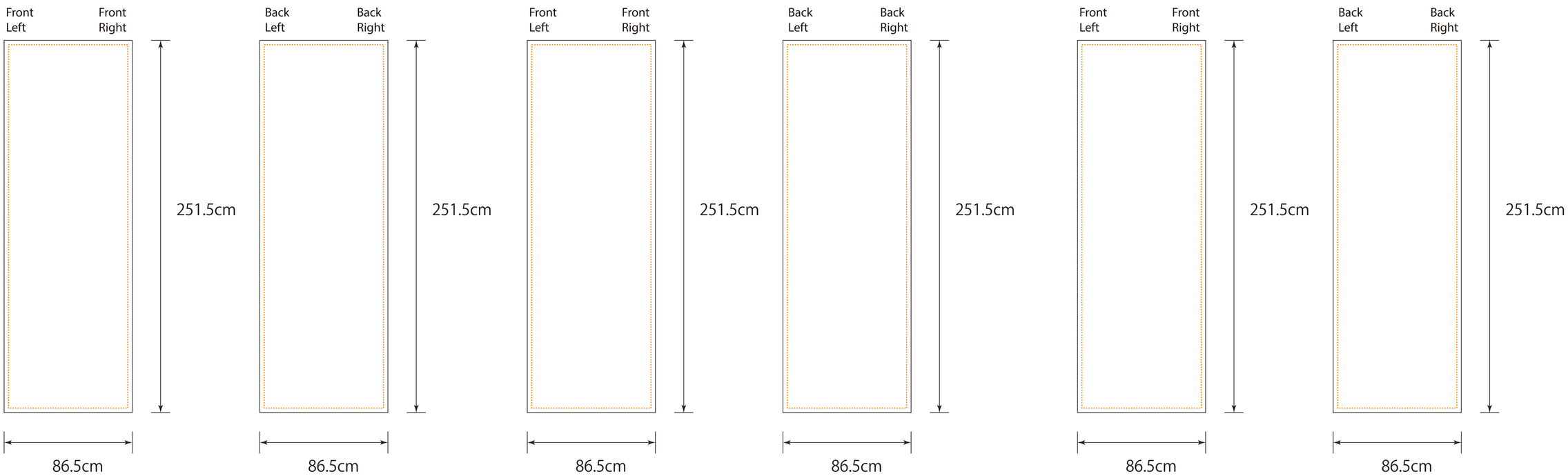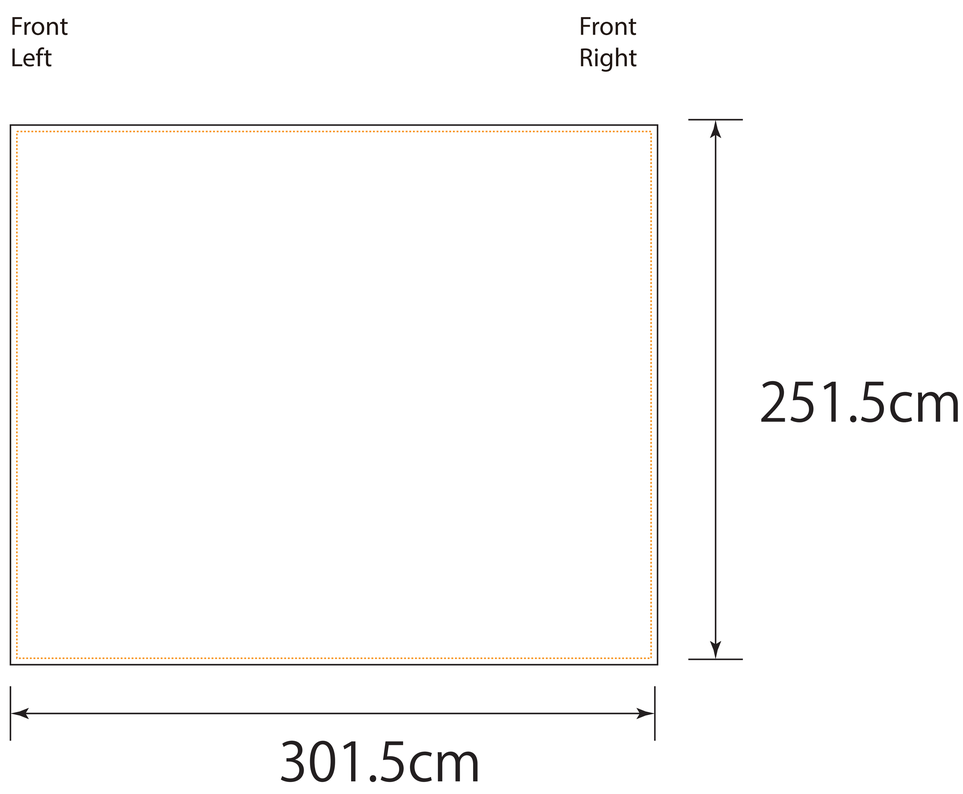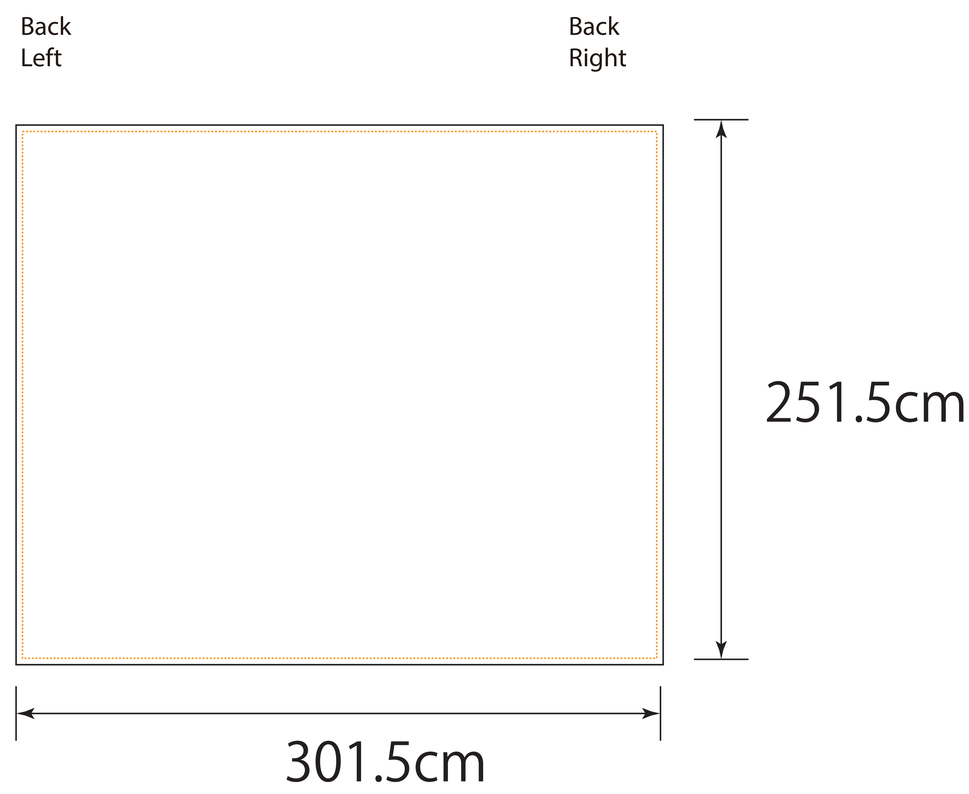Kit B-10x8.2ft