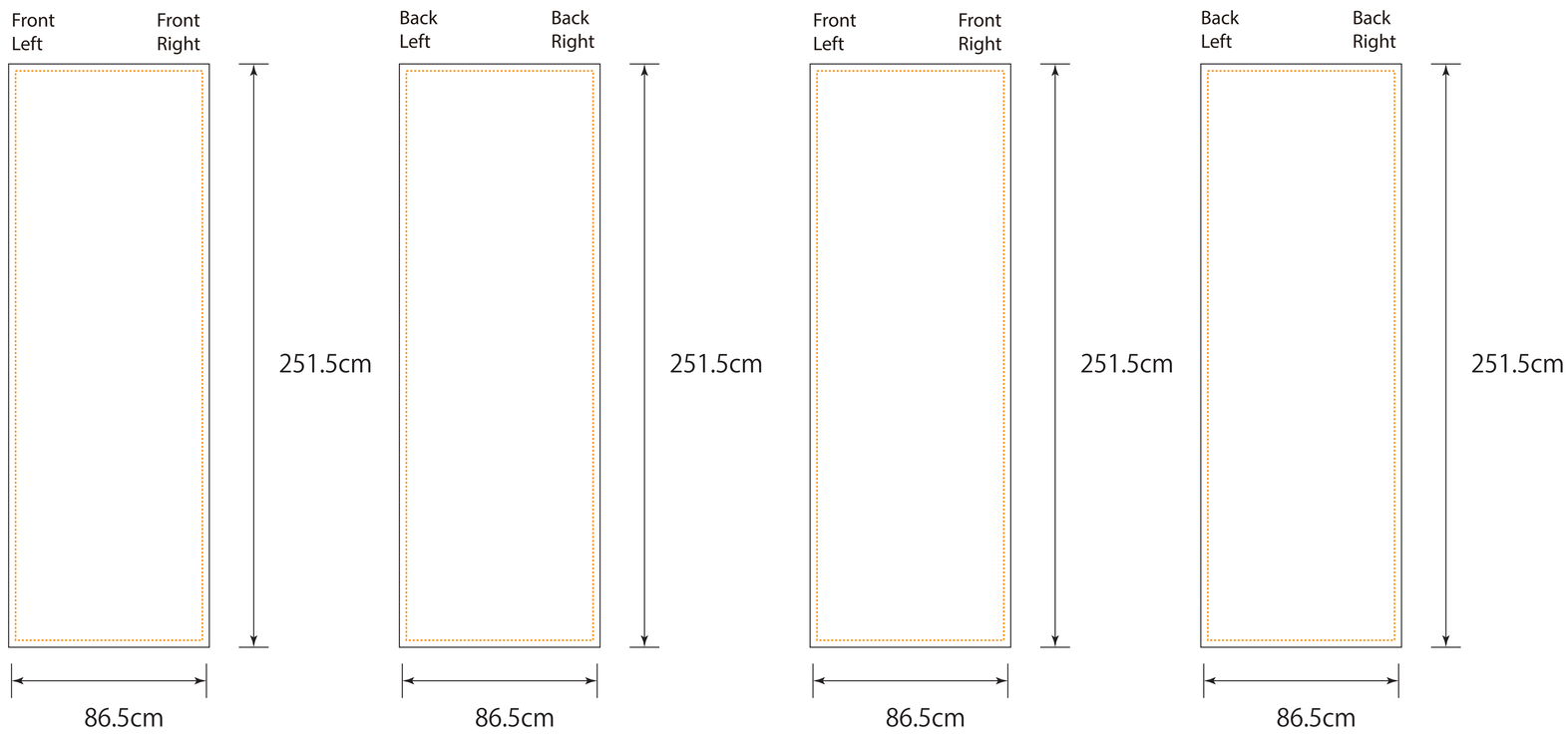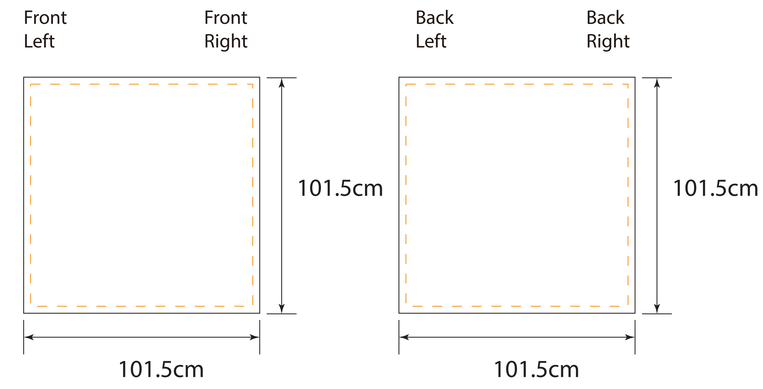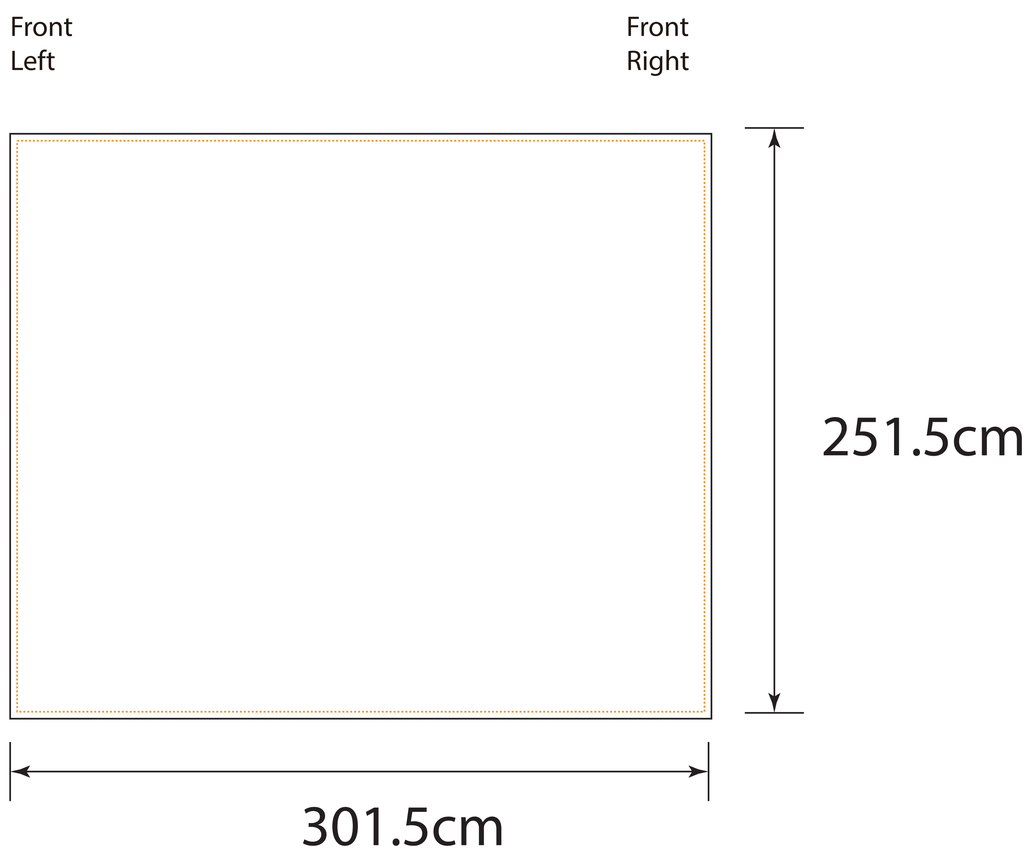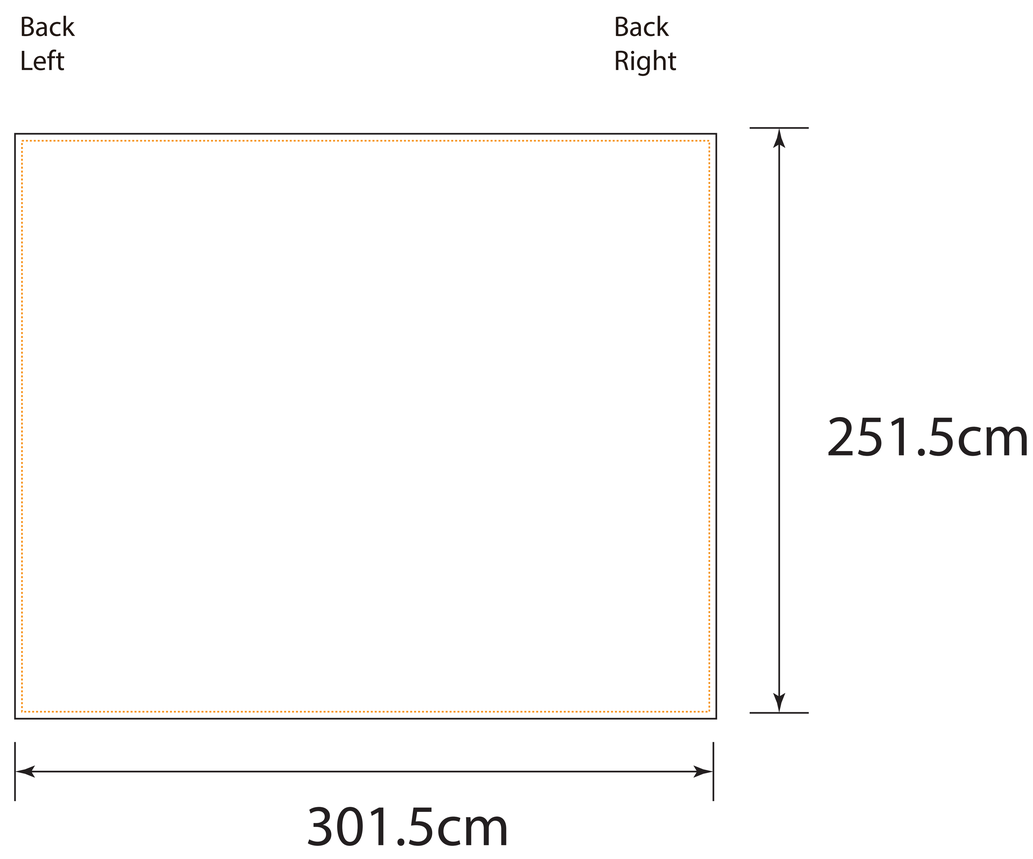Kit A-10x8.2ft