1 : 10

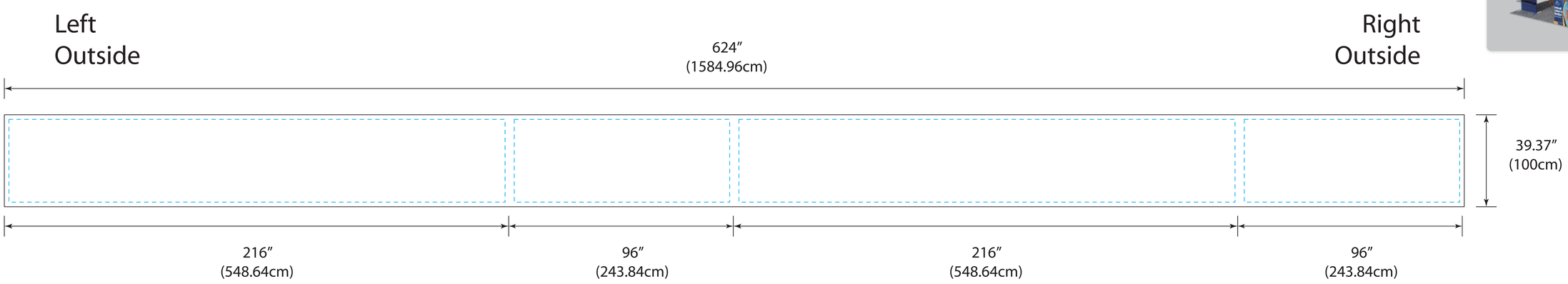
Left
Outside
624″
(1584.96cm)
Right
Outside
39.37″
(100cm)
216″
(548.64cm)
96″
(243.84cm)
216″
(548.64cm)
96″
(243.84cm)

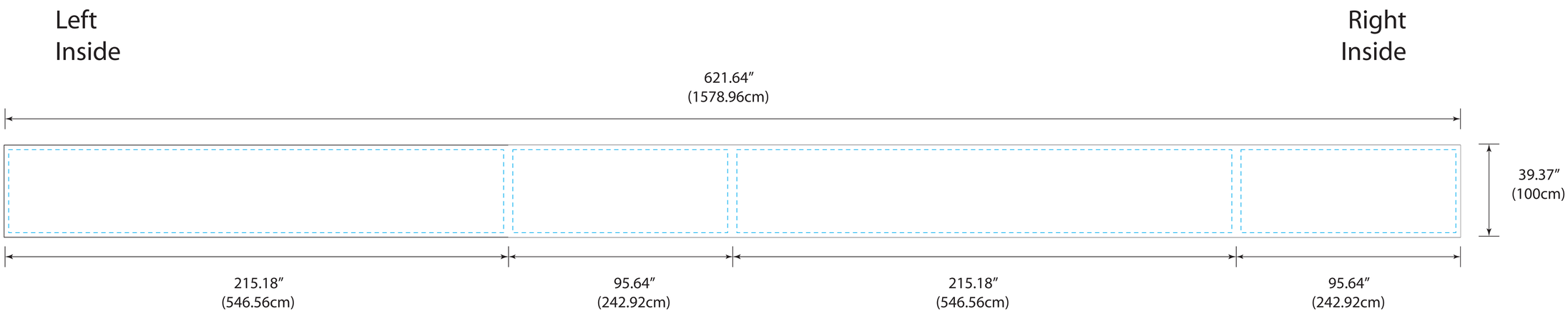
Left
Inside
621.64″
(1578.96cm)
Right
Inside
39.37″
(100cm)
215.18″
(546.56cm)
95.64″
(242.92cm)
215.18″
(546.56cm)
95.64″
(242.92cm)

8FT

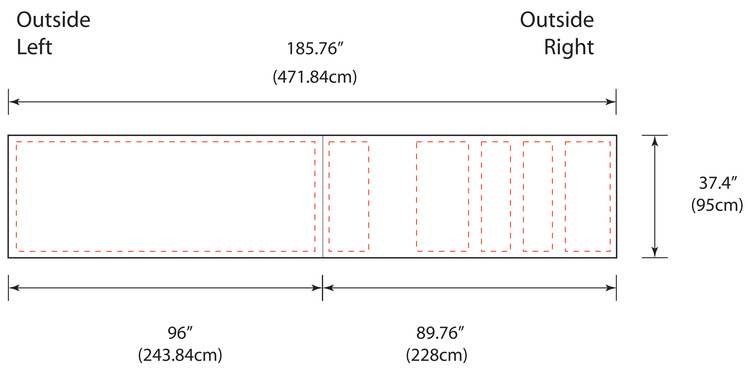
Outside
Left
185.76″
(471.84cm)
Outside
Right
37.4″
(95cm)
96″
(243.84cm)
89.76″
(228cm)

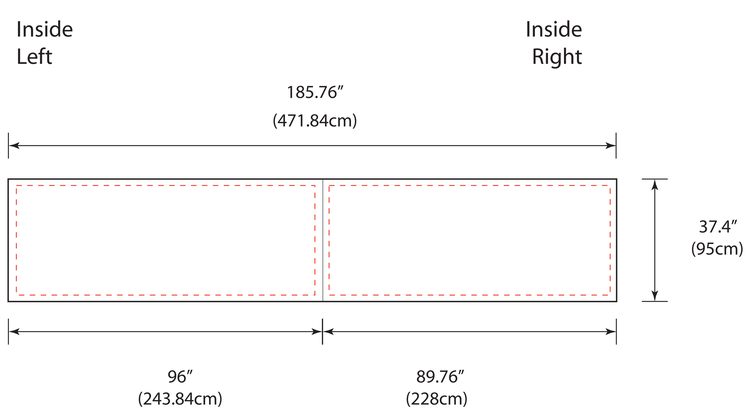
Inside
Left
185.76″
(471.84cm)
Inside
Right
37.4″
(95cm)
96″
(243.84cm)
89.76″
(228cm)

8FT

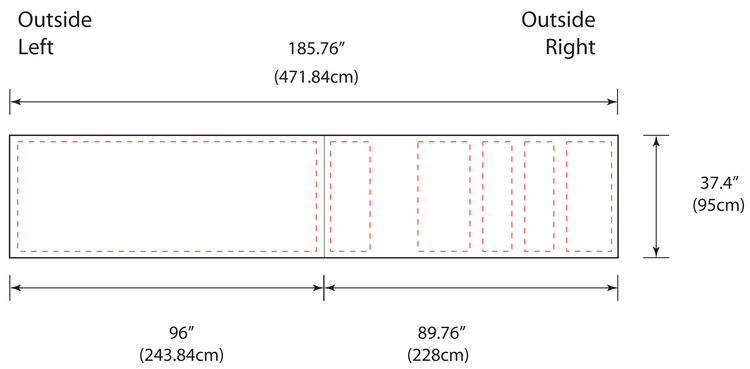
Outside
Left
185.76″
(471.84cm)
Outside
Right
37.4″
(95cm)
96″
(243.84cm)
89.76″
(228cm)

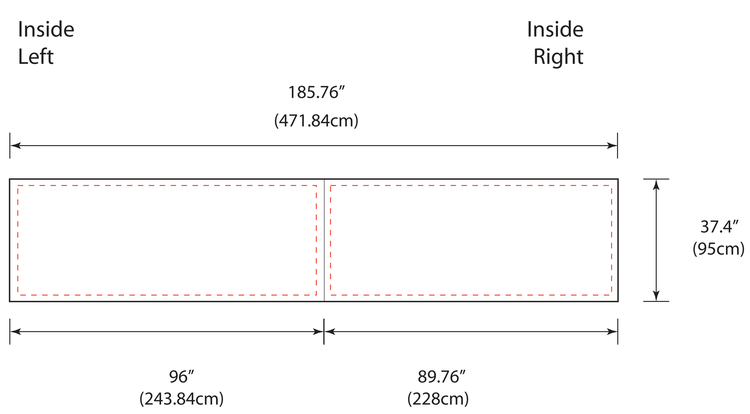
Inside
Left
185.76″
(471.84cm)
Inside
Right
37.4″
(95cm)
96″
(243.84cm)
89.76″
(228cm)

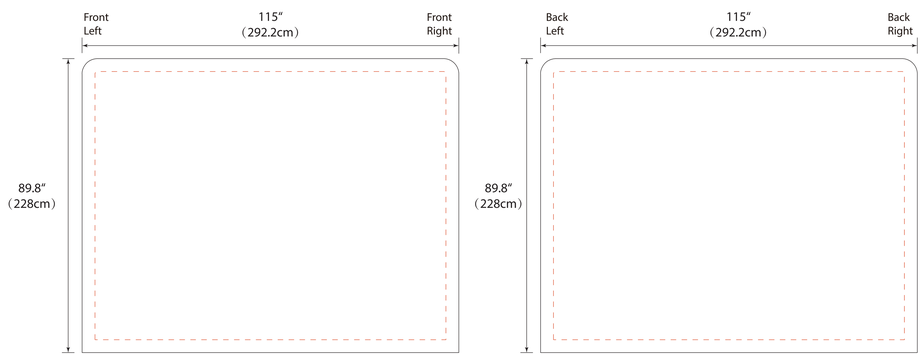
Front
Left
115″
(292.2cm)
Front
Right
89.8″
(228cm)
Back
Left
115″
(292.2cm)
Back
Right
89.8″
(228cm)

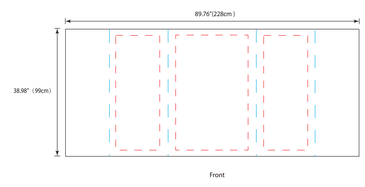
89.76"(228cm)
38.98" (99cm)
Front