New Style
50% Off

1:10

1:2

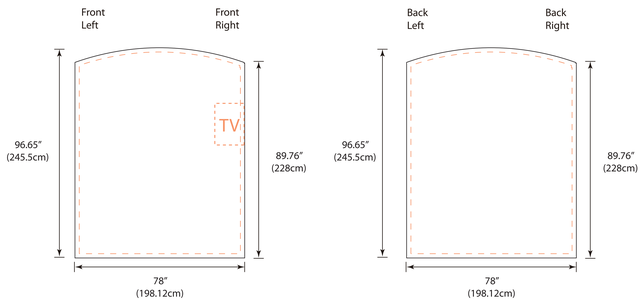
Front Left
Front Right
TV
96.65″ (245.5cm)
89.76″ (228cm)
78″ (198.12cm)
Back Left
Back Right
96.65″ (245.5cm)
89.76″ (228cm)
78″ (198.12cm)

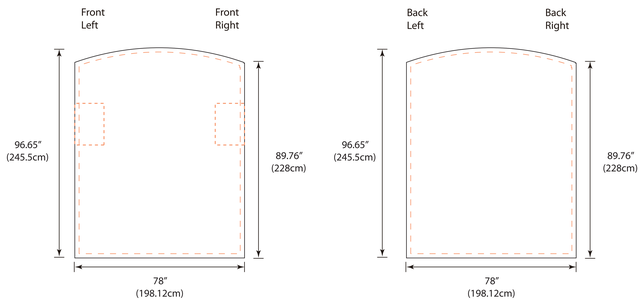
Front Left
Front Right
96.65″ (245.5cm)
89.76″ (228cm)
78″ (198.12cm)
Back Left
Back Right
96.65″ (245.5cm)
89.76″ (228cm)
78″ (198.12cm)

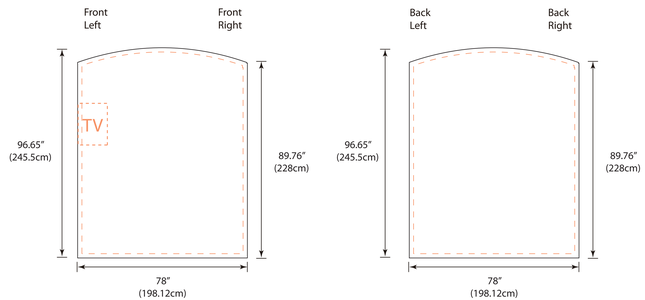
Front Left
Front Right
TV
96.65″ (245.5cm)
89.76″ (228cm)
78″ (198.12cm)
Back Left
Back Right
96.65″ (245.5cm)
89.76″ (228cm)
78″ (198.12cm)

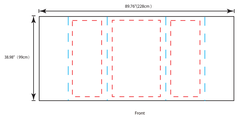
89.76"(228cm)
38.98" (99cm)
Front

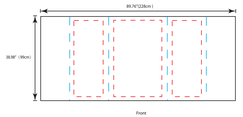
89.76"(228cm)
38.98" (99cm)
Front