Front

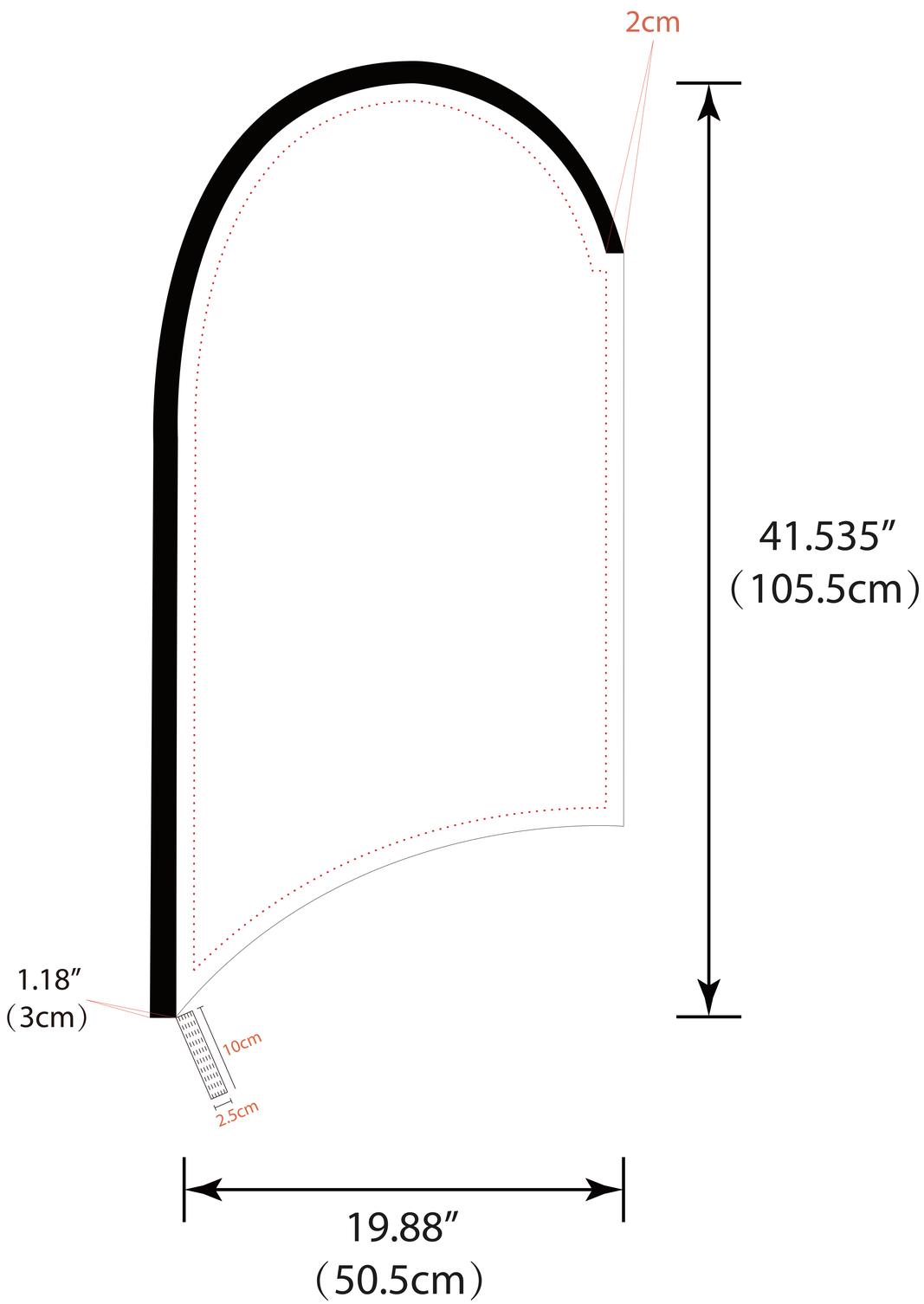
2cm
41.535″
(105.5cm)
1.18″
(3cm)
10cm
2.5cm
19.88″
(50.5cm)

Back

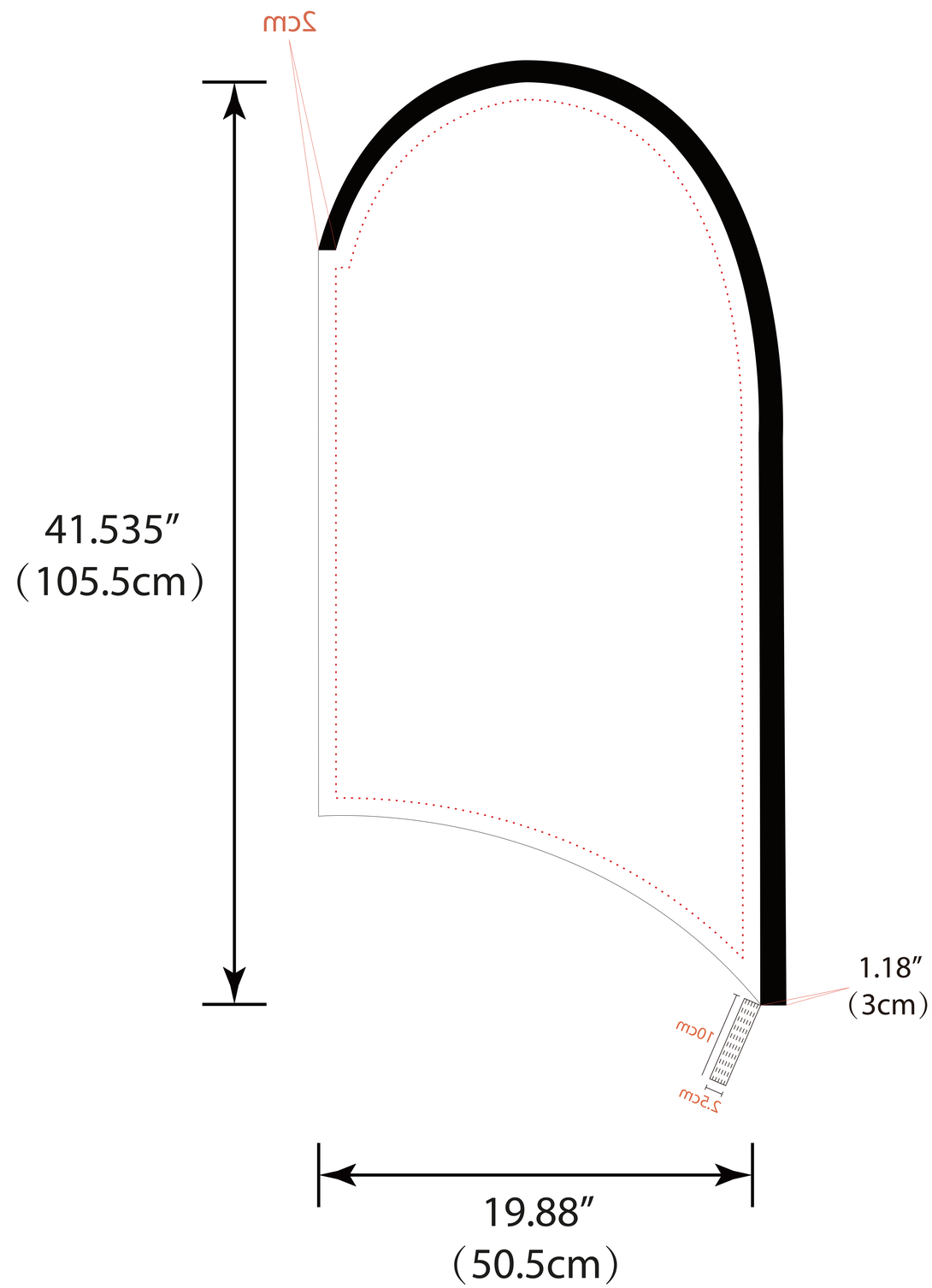
2cm
41.535″
(105.5cm)
1.18″
(3cm)
10cm
2.5cm
19.88″
(50.5cm)