8FT*7.5FT

1:10

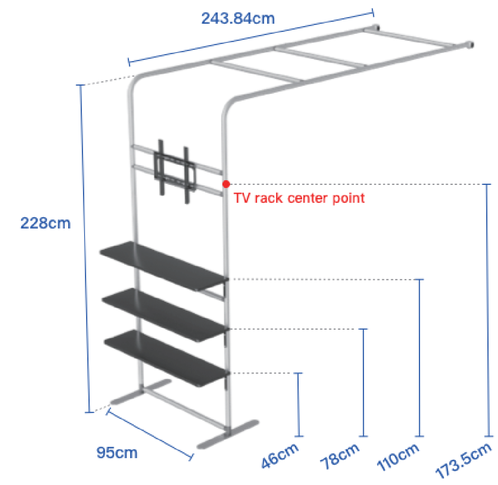
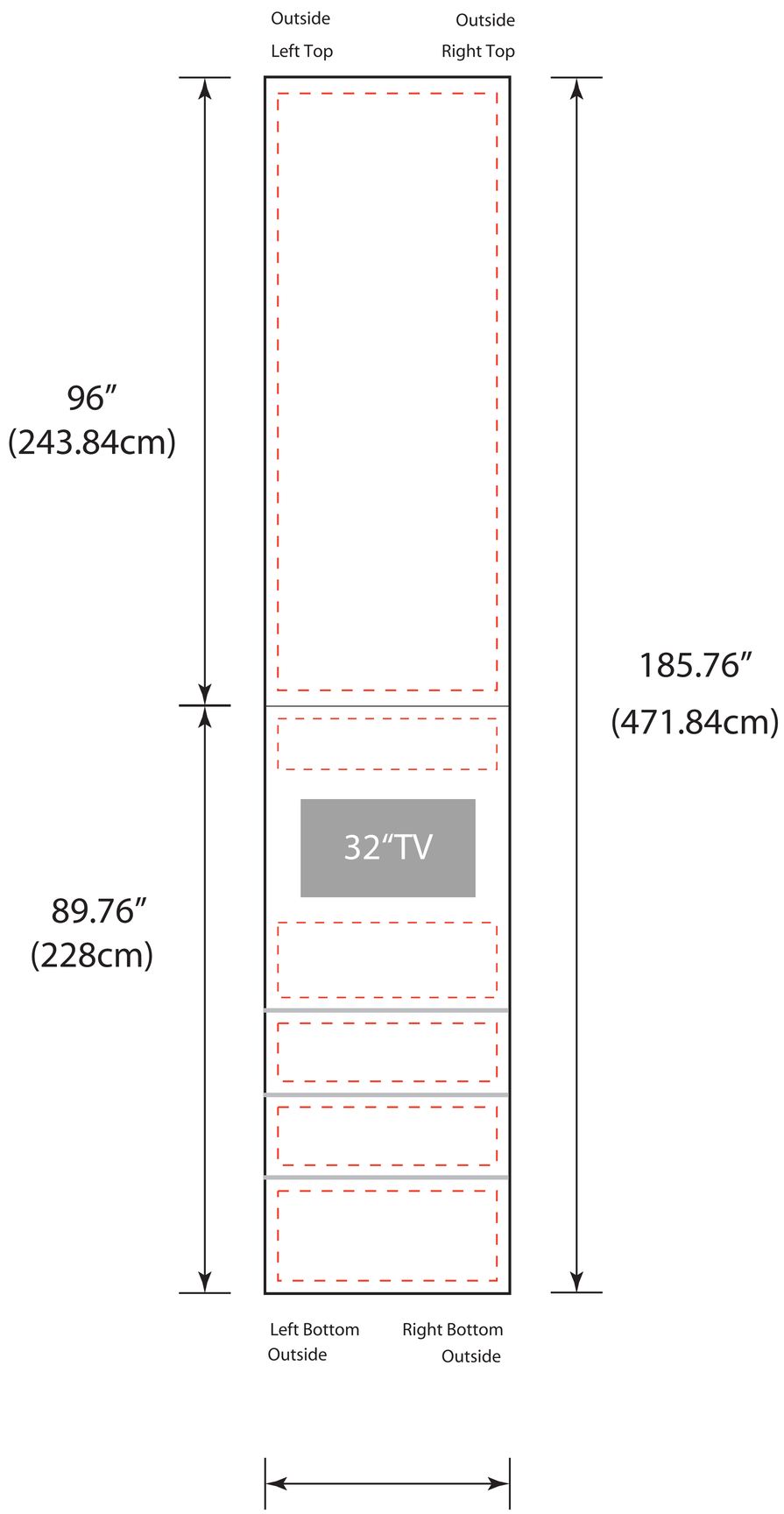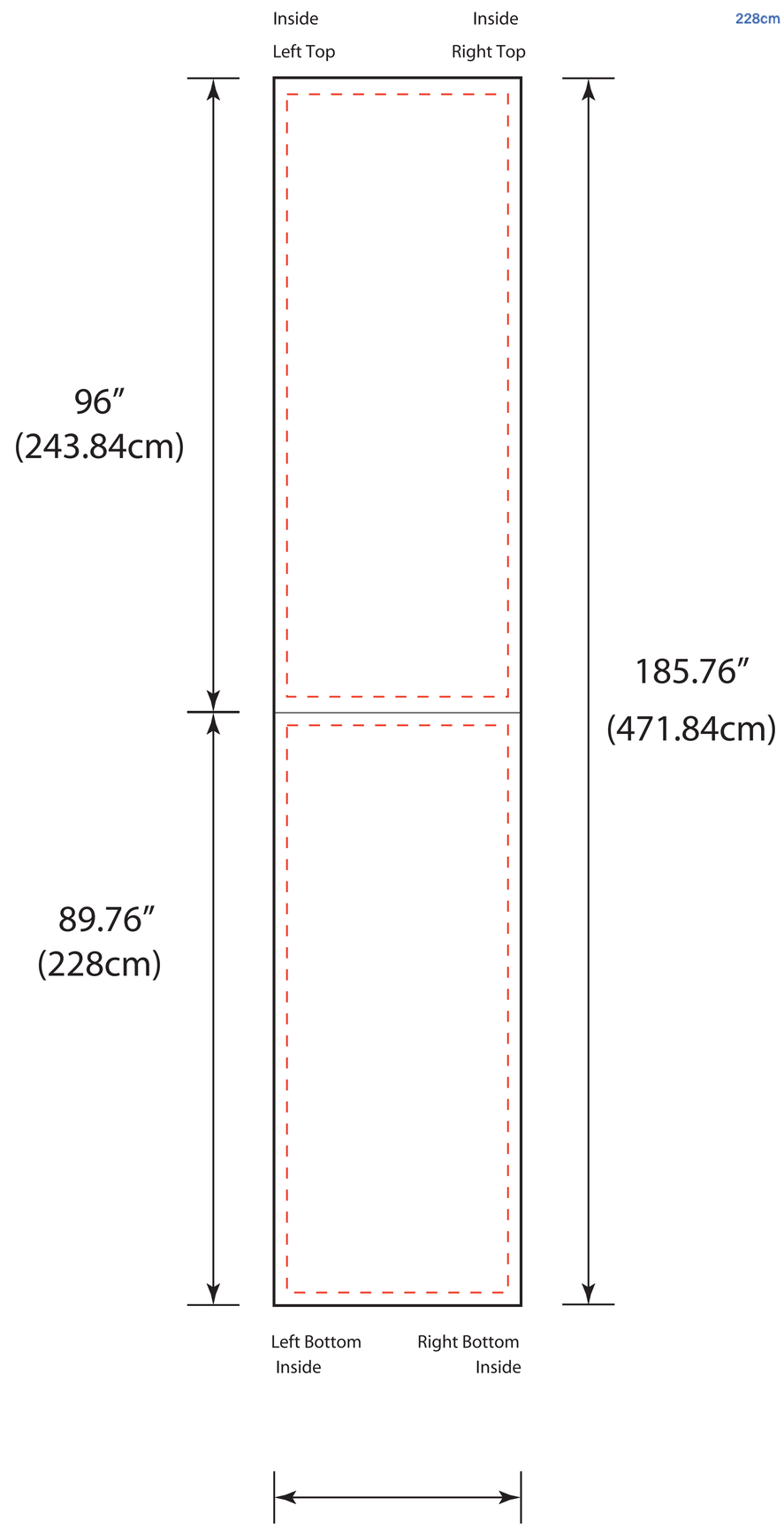
8x7.5ft