1: 2

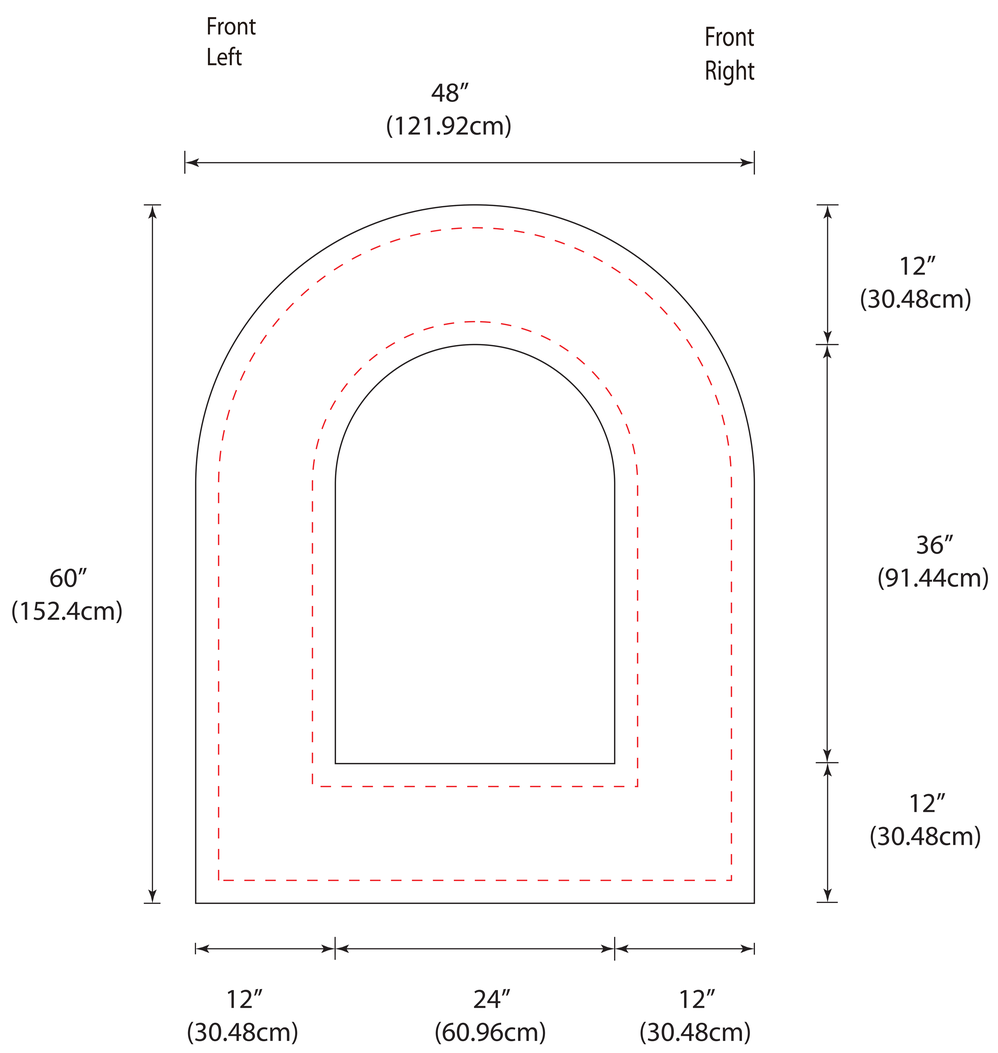
Front
Left
Front
Right
48″
(121.92cm)
12″
(30.48cm)
36″
(91.44cm)
12″
(30.48cm)
60″
(152.4cm)
12″
(30.48cm)
24″
(60.96cm)
12″
(30.48cm)

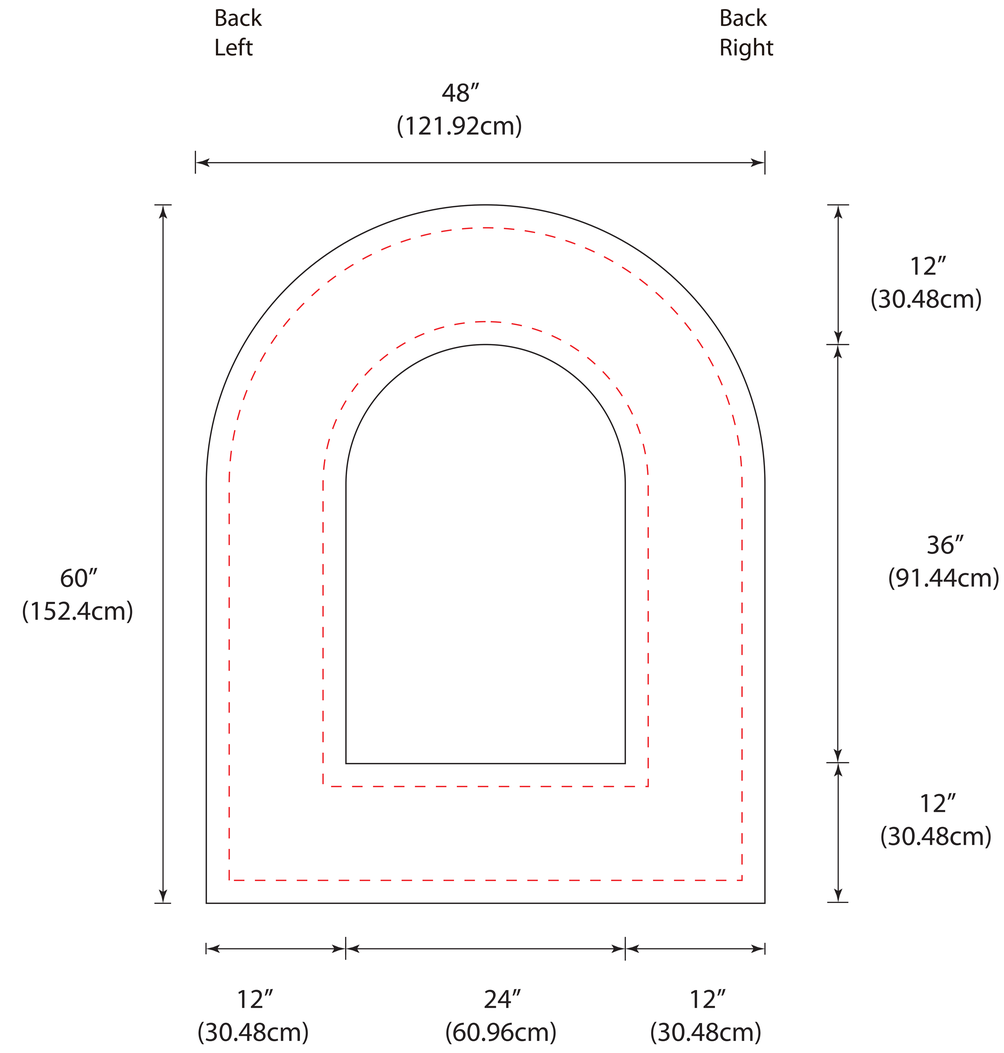
Back
Left
Back
Right
48″
(121.92cm)
12″
(30.48cm)
36″
(91.44cm)
12″
(30.48cm)
60″
(152.4cm)
12″
(30.48cm)
24″
(60.96cm)
12″
(30.48cm)